Fire damper

Type FKRS-EU

according to Declaration of Performance

DoP / FKRS-EU / DE / 002

Read the instructions prior to performing any task!

TROX® TECHNIK

The art of handling air

TROX GmbH
Heinrich-Trox-Platz
47504 Neukirchen-Vluyn
Germany
Phone: +49 (0) 2845 2020
Fax: +49 (0) 2845 202-265
E-mail: trox@trox.de
Internet: http://www.trox.de

Translation of the original
M375EE7, 2, GB/en
11/2014

General information

About this manual

This operating and installation manual enables operating or service personnel to correctly install the TROX product described below and to use it safely and efficiently.

This operating and installation manual is intended for use by fitting and installation companies, in-house technicians, technical staff, properly trained persons, and qualified electricians or air conditioning technicians.

It is essential that these individuals read and fully understand this manual before starting any work. The basic prerequisite for safe working is to comply with the safety notes and all instructions in this manual.

The local regulations for health and safety at work and general safety regulations also apply.

This manual must be given to the facilities manager when handing over the system. The facilities manager must include the manual with the system documentation. The manual must be kept in a place that is accessible at all times.

Illustrations in this manual are mainly for information and may differ from the actual design.

Copyright

TROX Technical Service

To ensure that a fault is processed as quickly as possible, please keep the following information ready:

- Delivery date of the TROX components and systems
- TROX order number
- Product name
- Brief description of the fault

Contact in case of a fault

Online	www.troxtechnik.com
Phone	+49 2845 202-400

Limitation of liability

The information in this manual has been compiled with reference to the applicable standards and guidelines, the state of the art, and our expertise and experience of many years.

The manufacturer does not accept any liability for damages resulting from:

- Non-compliance with this manual
- Incorrect use
- Operation or handling by untrained individuals
- Unauthorised modifications
- Technical changes
- Use of non-approved replacement parts

The actual scope of delivery may differ from the information in this manual for bespoke constructions, additional order options or as a result of recent technical changes.

The obligations agreed in the order, the general terms and conditions, the manufacturer's terms of delivery, and the legal regulations in effect at the time the contract is signed shall apply.

We reserve the right to make technical changes.

Defects liability

For details regarding defects liability please refer to Section VI, Warranty Claims, of the Delivery and Payment Terms of TROX GmbH.

The Delivery and Payment Terms of TROX GmbH are available at www.troxtechnik.com.

Safety notes

Symbols are used in this manual to alert readers to areas of potential hazard. Signal words express the degree of the hazard.

DANGER!

Imminently hazardous situation which, if not avoided, will result in death or serious injury.

WARNING!

Potentially hazardous situation which, if not avoided, could result in death or serious injury.

CAUTION!

Potentially hazardous situation which, if not avoided, may result in minor or moderate injury.

NOTICE!

Potentially hazardous situation which, if not avoided, may result in property damage.

ENVIRONMENT!

Environmental pollution hazard.

Tips and recommendations

Useful tips and recommendations as well as information for efficient and fault-free operation.

Safety notes as part of instructions

Safety notes may refer to individual instructions. In this case, safety notes will be included in the instructions and hence facilitate following the instructions. The above listed signal words will be used.

Example:

1. ▸ Untighten the screw.
2. ▸ **CAUTION!**

   Danger of finger entrapment when closing the lid.

   Be careful when closing the lid.
3. ▸ Tighten the screw.

Specific safety notes

The following symbols are used in safety notes to alert you to specific hazards:

Warning signs	Type of danger
	Warning – danger zone.

Table of contents

1 Safety

1.1 General safety notes

Sharp edges, sharp corners and thin sheet metal parts

CAUTION!

Danger of injury at sharp edges, sharp corners and thin sheet metal parts!

Sharp edges, sharp corners and thin sheet metal parts may cause cuts or grazes.

– Be careful when carrying out any work.
– Wear protective gloves, safety shoes and a hard hat.

Electrical voltage

DANGER!

Danger of electric shock! Do not touch any live components! Electrical equipment carries a dangerous electrical voltage.

– Only skilled qualified electricians are allowed to work on the electrical system.
– Switch off the power supply before working on any electrical equipment.

1.2 Correct use

- The fire damper is used as an automatic shut-off device to prevent fire and smoke from spreading through ducting.
- The fire damper is suitable for supply air and extract air systems.
- Operation of the fire damper is allowed only in compliance with installation regulations and the technical data in this operating and installation manual.
- Modifications of the fire damper and the use of replacement parts that have not been approved by TROX are not permitted.

Incorrect use

WARNING!

Danger due to incorrect use!

Incorrect use of the fire damper can lead to dangerous situations.

Never use the fire damper

– in areas with potentially explosive atmospheres
– as a smoke extract damper
– outdoors without sufficient protection against the effects of weather
– in atmospheres where chemical reactions, whether planned or unplanned, may cause damage to the fire damper or lead to corrosion

1.3 Qualified staff

WARNING!

Danger of injury due to insufficiently qualified individuals!

Incorrect use may cause considerable injury or damage to property.

– Only skilled qualified personnel must carry out work.

The following degrees of qualification are required for the work described in the operating manual:

Skilled qualified electrician
Skilled qualified electricians are trained individuals who have specialist knowledge and experience and who know the relevant standards and guidelines to be able to work on electrical systems and to recognise and avoid potential dangers.

Specialist personnel
Specialist personnel are trained individuals who have specialist knowledge and experience and who know the relevant guidelines to be able to carry out the assigned duties and to recognise and avoid potential dangers.

2 Technical data

2.1 General data

Nominal sizes	100 – 315 mm
Volume flow rate range	up to 770 l/s up to 2770 m³/h
Differential pressure range	up to 1500 Pa
Operating temperature [1]	At least 0 – 50 °C
Release temperature	72 °C or 95 °C (for warm air ventilation systems)
Upstream velocity [2]	≤ 8 m/s with fusible link ≤ 10 m/s with spring return actuator
Closed blade air leakage	EN 1751, Class 3
Casing air leakage	EN 1751, Class C
EC conformity	▪ Construction Products Regulation (EU) no. 305/2011 ▪ EN 15650 – Ventilation for buildings – Fire dampers ▪ EN 13501-3 – Classification – Part 3: Fire resisting ducts and fire dampers ▪ EN 1366-2 – Fire resistance tests for service installations – Part 2: Fire dampers ▪ EN 1751 Ventilation for buildings – Air terminal devices
Declaration of Performance	DoP / FKRS-EU / DE / 002

[1] Temperatures may differ for units with attachments

[2] Data applies to uniform upstream and downstream conditions for the fire damper

Rating plate

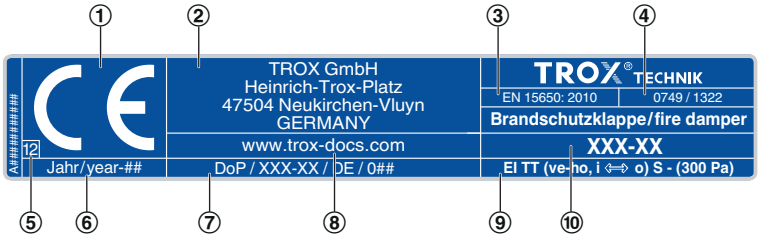

Fig. 1: Rating plate (example)

① CE mark
② Manufacturer's address
③ Number of the European standard and year of its publication
④ Notified body
⑤ The last two digits of the year in which the CE marking was affixed
⑥ Year of manufacture
⑦ No. of the declaration of performance
⑧ Website from which the DoP can be downloaded
⑨ Regulated characteristics; the fire resistance class depends on the application and may vary *Chapter 5.1 'Installation situations' on page 13*
⑩ Type

2.2 FKRS-EU with fusible link

Dimensions and weight

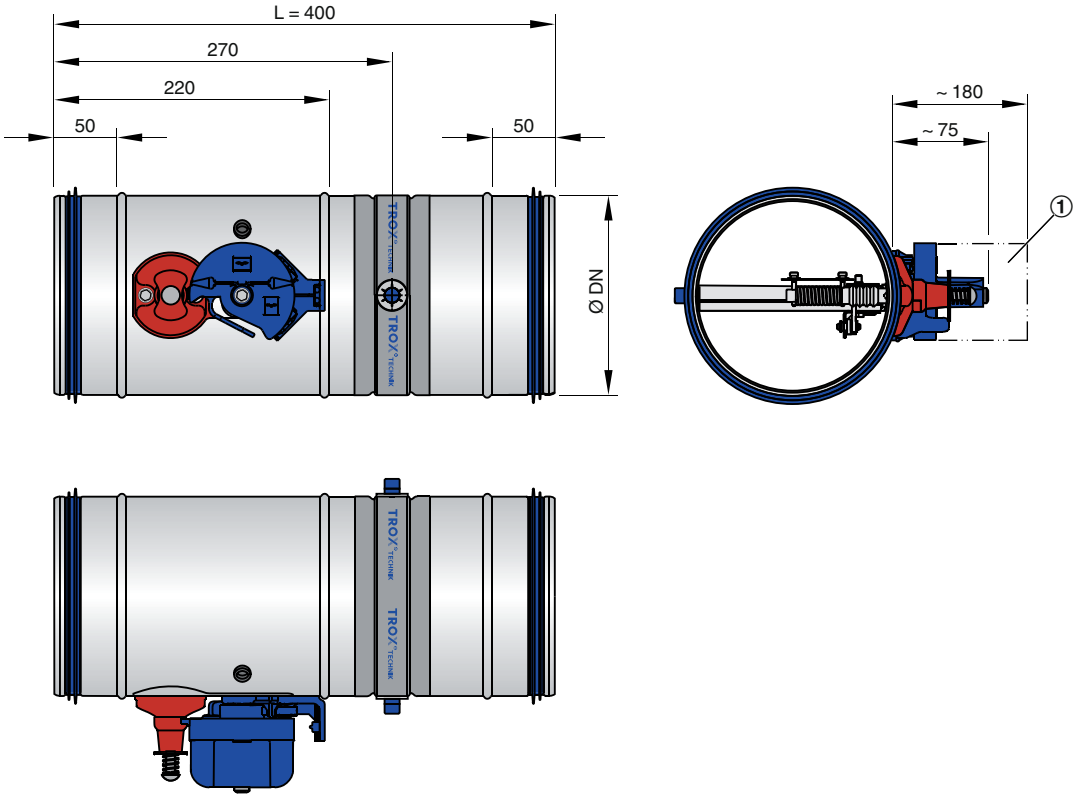

Fig. 2: FKRS-EU with fusible link

① Keep clear to provide access for operation

Weight [kg]										
Nominal size [mm]	**100**	**125**	**150**	**160**	**180**	**200**	**224**	**250**	**280**	**315**
ØDN [mm]	99	124	149	159	179	199	223	249	279	314
FKRS-EU with fusible link	1.3	1.6	1.8	2.0	2.3	2.5	2.7	3.3	3.8	4.4
... with circular installation block (ER)	5.7	8.6	7.6	7.3	11.0	9.8	13.5	12.1	16.0	15.0
... with square installation block (EQ)	7.3	11.2	10.2	9.9	13.3	13.6	18.8	17.3	22.9	20.0
... with square installation block (TQ)	5.4	6.1	7.0	7.9	8.8	9.7	10.6	12.0	13.7	15.8
... with wall face frame (WA)	4.4	5.2	6.1	6.6	7.4	8.2	9.0	10.2	11.7	13.6

Limit switches	
Connecting cable length / cross section	1 m / 3 × 0.34 mm²
Protection level	IP 66
Type of contact	1 changeover contact, gold-plated
Maximum switching current	0.5 A
Maximum switching voltage	30 V DC, 250 V AC
Contact resistance	approx. 30 mΩ

2.3 FKRS-EU with spring return actuator

Dimensions and weight

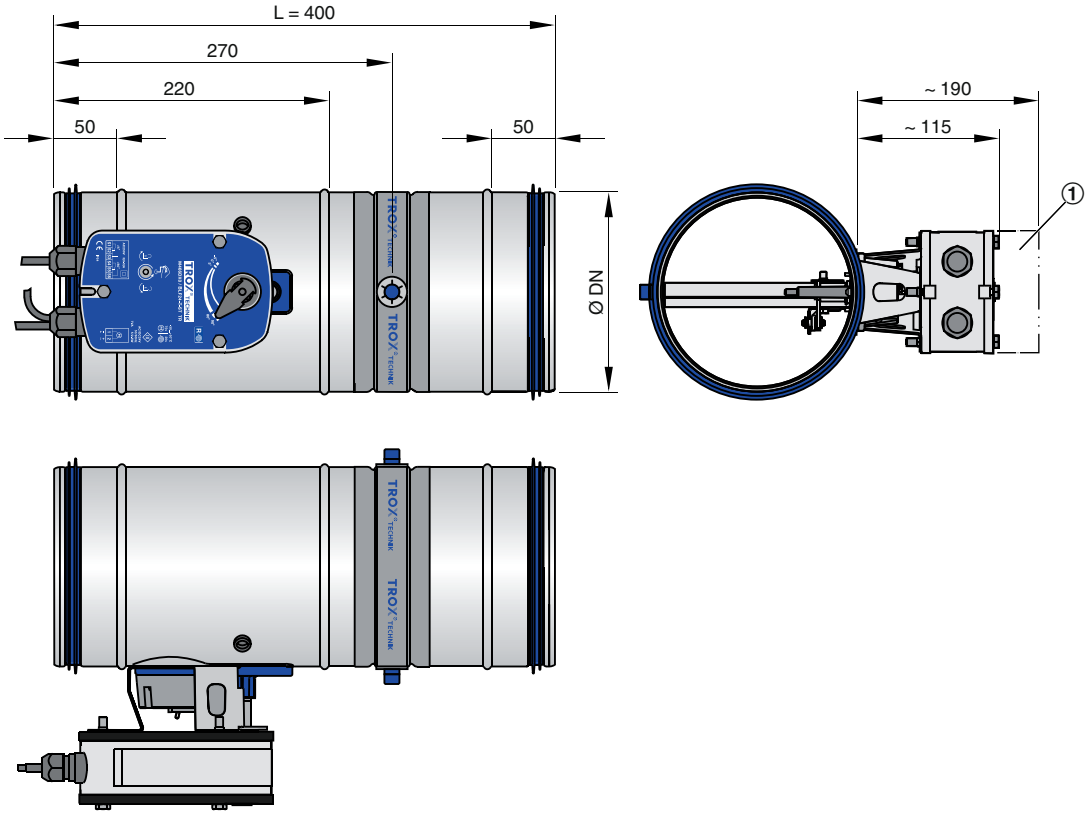

Fig. 3: FKRS-EU with spring return actuator

① Keep clear to provide access for operation

Weight [kg]										
Nominal size [mm]	**100**	**125**	**150**	**160**	**180**	**200**	**224**	**250**	**280**	**315**
ØDN [mm]	99	124	149	159	179	199	223	249	279	314
FKRS-EU with spring return actuator	3.1	3.4	3.6	3.7	4.0	4.2	4.5	5.0	5.5	6.2
... with circular installation block (ER)	7.5	10.4	9.4	9.1	12.8	11.6	15.3	13.9	17.8	16.8
... with square installation block (EQ)	9.1	13.0	12.0	11.7	15.1	15.4	20.6	19.1	24.7	21.8

Weight [kg]										
Nominal size [mm]	**100**	**125**	**150**	**160**	**180**	**200**	**224**	**250**	**280**	**315**
... with square installation block (TQ)	7.2	7.9	8.8	9.7	10.6	11.5	12.4	13.8	15.5	17.6
... with wall face frame (WA)	6.2	7.0	7.9	8.4	9.2	10.0	10.8	12.0	13.5	15.4

Spring return actuator BLF...			
Construction		**230-T TR**	**24-T-ST TR**
Supply voltage		230 V AC ±14 % 50/60 Hz	24 V AC ±20 % 50/60 Hz or 24 V DC –10 % / +20 %
Power rating	Spring compression	6 W	5 W
	Hold position	3 W	2.5 W
	Rating	7 VA	
Running time	Motor / spring return	40 – 75 s / 20 s	
Limit switches	Type of contact	2 changeover contacts	
	Switching voltage	5 – 120 V DC / 5 – 250 V AC	
	Switching current	1 mA – 3 A	
	Contact resistance	< 100 mΩ	
IEC protection class		II	III
Protection level		IP 54	
Storage temperature		-40 to 50 °C	
Ambient temperature		-30 to 50 °C [1]	
Ambient humidity		≤ 95 % RH, non-condensing	
Connecting cable	Actuator	1 m / 2 × 0.75 mm²	
	Limit switches	1 m / 6 × 0.75 mm²	

[1] Up to 75 °C the safe position will definitely be reached.

3 Transport and storage

Delivery check

Check delivered items immediately after arrival for transport damage and completeness. In case of any damage or an incomplete shipment, contact the shipping company and your supplier immediately.

- Fire damper
  - Attachments/accessories, if any
- Operating manual (1 per shipment)

Colour hues on the damper blade

The blades of fire dampers are treated with a greenish impregnating agent. Resulting colour hues on the damper blade are due to technical reasons and do not constitute a defect of any kind.

Transport on site

If possible, take the fire damper in its transport packaging up to the installation location.

Storage

If the unit has to be stored temporarily:

- Remove any plastic wrapping.
- Protect the unit from dust and contamination.
- Store the unit in a dry place and away from direct sunlight.
- Do not expose the unit to the effects of weather (not even in its packaging).
- Do not store the unit below -40 °C or above 50 °C.

Packaging

Properly dispose of packaging material.

4 Parts and function

Fire dampers are used as safety related components in ventilation systems. The fire damper is used as a shut-off device to prevent fire and smoke from spreading through ducting. During normal operation the damper blade is open to enable air passage through the ventilation system.

If the temperature increases in the event of a fire, the damper blade closes. Closure is triggered at 72 °C (95 °C in warm air ventilation systems). If the damper blade closes due to a temperature increase (i.e. in the event of a fire), it must not be reopened.

To ensure proper functioning of the fire damper, a test can be carried out. ↳ 52

4.1 FKRS-EU with fusible link

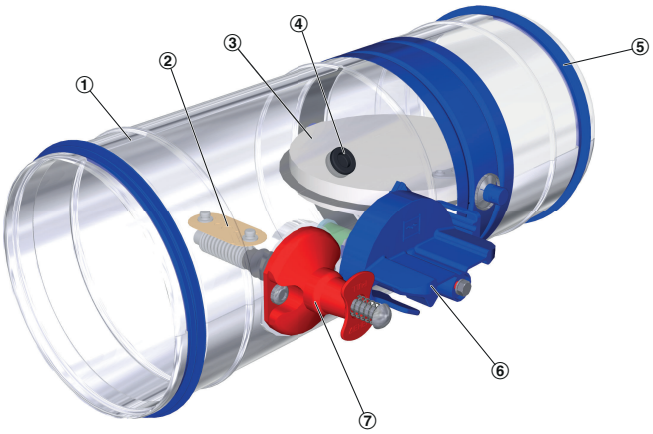

Fig. 4: FKRS-EU with fusible link

① Casing
② Fusible link
③ Damper blade with seal
④ Inspection access
⑤ Lip seal
⑥ Handle with interlock and damper blade position indicator
⑦ Release mechanism

Functional description

In fire dampers with a fusible link, damper closure is triggered by the fusible link. If the temperature inside the fire damper rises to 72 °C or 95 °C, the fusible link triggers a coil spring mechanism. The coil spring mechanism then causes the fire damper to close.

As an option, the fire damper can be either supplied or subsequently fitted with one or two limit switches. The limit switches can signal the damper blade position to the central BMS or fire alarm system. One limit switch each is required for damper blade positions OPEN and CLOSED.

4.2 FKRS-EU with spring return actuator

Fig. 5: FKRS-EU with spring return actuator

① Casing
② Temperature sensor
③ Damper blade with seal
④ Inspection access
⑤ Lip seal
⑥ Spring return actuator
⑦ Thermoelectric release mechanism

Functional description

The spring return actuator enables the motorised opening and closing of the damper blade; it can be activated by the central BMS. As long as power is supplied to the actuator, the damper blade remains open. In the event of a fire, the internal thermoelectric release mechanism closes the damper blade when at least one of the following is true:

- Temperature in the fire damper > 72 °C or > 95 °C
- Ambient temperature outside the release mechanism > 72 °C
- The power supply is interrupted (power off to close)

As standard, the spring return actuator is equipped with limit switches that can be used to indicate the damper blade position.

5 Installation

5.1 Installation situations

> ***Note***
> *The performance classes of the fire damper and the wall or ceiling slab may differ. The lower performance class determines the performance class of the overall system.*

Installation situations					
Supporting construction	**Installation location**	**Minimum thickness [mm]**	**Class of performance EI TT (v_e–h_o, i ↔ o) S**	**Installation type**	**Installation information**
Solid walls Gross density ≥ 500 kg/m³	In solid walls	100	EI 120 S	N	*16*
				W[1]	*18*
			EI 90 S	E	*17*
				W[1]	*18*
	On the face of solid walls	100	EI 90 S	E	*20*
Solid ceiling slabs Gross density ≥ 600 kg/m³	In solid ceiling slabs	150	EI 120 S	N	*21*
			EI 90 S	E	*23*
				W	*24*
	In concrete bases			N	*25*
Lightweight partition walls	In lightweight partition walls with metal support structure and cladding on both sides	100	EI 120 S	N[1]	*29*
				E	*32*
				W[1]	*34*
			EI 90 S	N	*29*
				E	*32*
				W[1]	*34*
	In lightweight partition walls with metal support structure and cladding on both sides, and with flexible ceiling joint	100	EI 90 S	E	*36*
Fire walls	In fire walls with metal support structure and cladding on both sides	115	EI 90 S	N	*40*
				E	*41*
Shaft walls	In lightweight partition walls with metal support structure and cladding on one side	90	EI 90 S	N	*44*
				EQ	*45*

[1] The class of performance depends on the installation details.

N = Mortar-based installation

E = Installation block or kit (ER, TQ, WA, GL)

EQ = Installation block EQ

W = Fire batt

5.2 Safety notes on installation

Sharp edges, sharp corners and thin sheet metal parts

CAUTION!

Danger of injury at sharp edges, sharp corners and thin sheet metal parts!

Sharp edges, sharp corners and thin sheet metal parts may cause cuts or grazes.

– Be careful when carrying out any work.
– Wear protective gloves, safety shoes and a hard hat.

5.3 General installation information

NOTICE!

Damage to the fire damper

– Protect the fire damper from contamination and damage.
– Cover openings and release mechanism (e.g. with plastic foil) to protect them from mortar and dripping water.
– Do not remove the transport and installation protection (if any) until installation is complete.

Please note:

- Operating components, electric actuator, and inspection access must remain accessible for inspection and maintenance work.
- Loads imposed on the casing may impair the function of the fire damper. The fire damper must hence be installed without exercising any tension.
- Mortar-based installation: The perimeter gap »s « must be large enough such that mortar can be filled in even in case of thicker walls.
- Before installation: Perform a functional test, then close the fire damper. ↳ 52

Installation position

The fire damper can be installed with the damper blade shaft in any position (0 to 360°)(Fig. 6). The position of the release mechanism is not critical but the mechanism must remain accessible for maintenance.

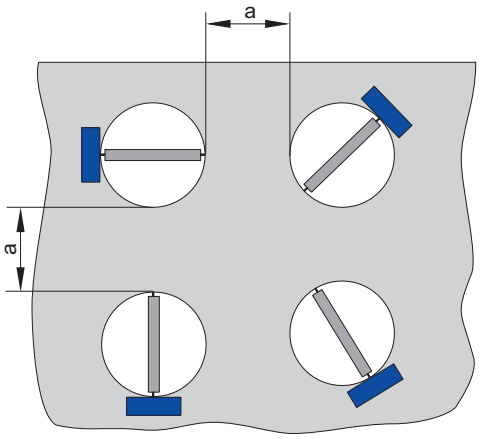

Fig. 6: Installation positions and distances

a Distance between two fire dampers. The distance depends on the installation situation and is given in the installation details.

Acceptable mortars for mortar-based installation

In case of mortar-based installation, the open spaces between the fire damper casing and the wall or ceiling slab must be closed off with mortar. Entrapped air is to be avoided. The mortar bed depth should be equal to the thickness of the wall but must be at least 100 mm.

The following mortars are acceptable:

- DIN 1053: Groups II, IIa, III, IIIa; fire protection mortar of groups II, III
- EN 998-2: Classes M 2.5 to M 10 or fire protection mortar of classes M 2.5 to M 10
- Equivalent mortars that meet the requirements of the above standards, gypsum mortar or concrete

Acceptable fire batt systems

The following fire batt systems may be used:

Hilti fire batt system

- Firestop board CFS-CT B 1S 140/50
- Fire protection coating CFS-CT
- Fire protection sealant CFS-S ACR

HENSEL fire batt system

- Mineral wool slab ROCKWOOL Hardrock 40
- Fire protection coating HENSOMASTIK 5 KS Farbe (coating)
- Fire protection sealant HENSOMASTIK 5 KS Spachtel (sealant)

5.3.1 After installation

- Clean the fire damper.
- Remove transport and installation protection, if any. In case of mortar-based installation this protection must not be removed until the mortar has hardened.
- Test the function of the fire damper.

- Connect the ductwork.
- Make electrical connections.

5.4 Solid walls

5.4.1 Mortar-based installation

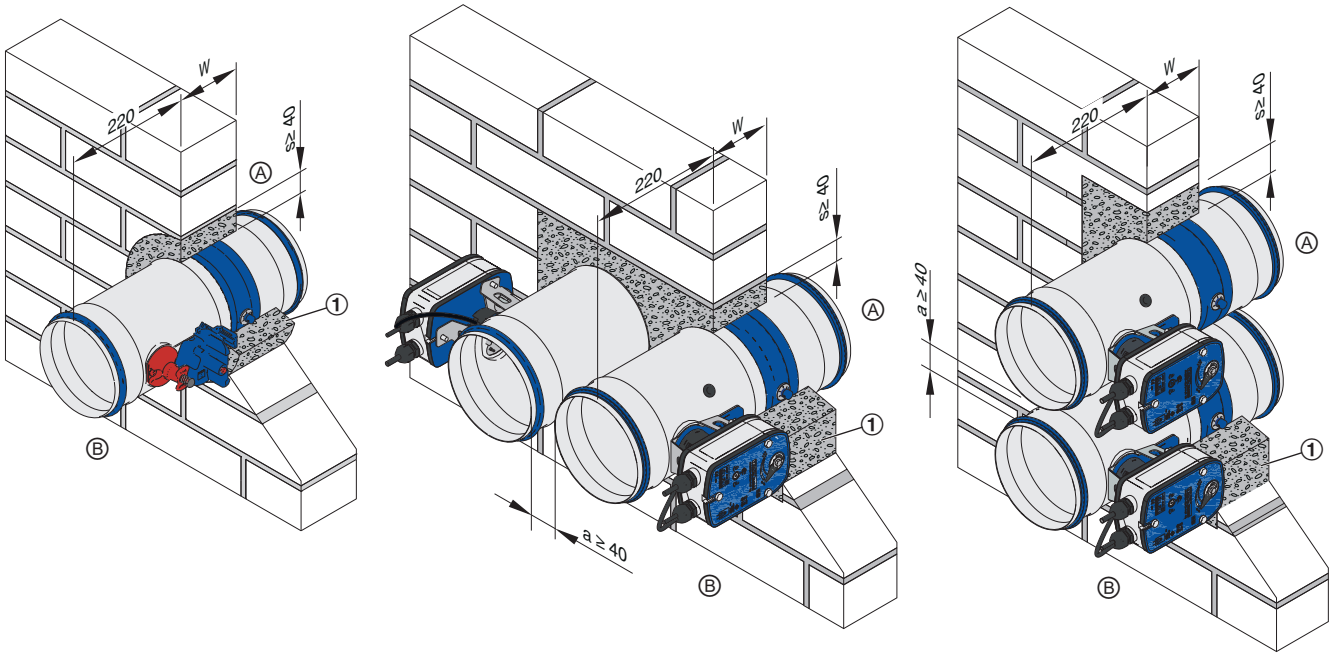

Fig. 7: Installation into a solid wall

① Mortar
Ⓐ Installation side
Ⓑ Operating side

Personnel:

- Specialist personnel

Materials:

- Mortar *'Acceptable mortars for mortar-based installation' on page 14*

Requirements

- Performance class EI 120 S
- Solid walls or fire walls made of, for example, concrete, aerated concrete, masonry, or solid gypsum wallboards according to EN 12859 (without open spaces), gross density ≥ 500 kg/m³ and W ≥ 100 mm
- ≥ 40 mm distance to load-bearing structural elements
- 40 mm minimum distance between two fire dampers

1. Create an appropriate opening or cut hole: ØDN + at least 80 mm
2. Push the fire damper into the installation opening and secure it. Make sure that the distance from the connecting spigot on the operating side to the wall is 220 mm.

   If the wall thickness is >115 mm , extend the fire damper on the installation side with an extension piece or a spiral duct.
3. Close off the perimeter gap »s« with mortar. The mortar bed depth must be at least 100 mm.

If the fire damper is installed as the wall is being erected, the perimeter gap »s« is not required. The open spaces between the fire damper and the wall must be closed off with mortar. Entrapped air is to be avoided. The mortar bed depth should be equal to the thickness of the wall.

5.4.2 Dry mortarless installation with circular installation block ER

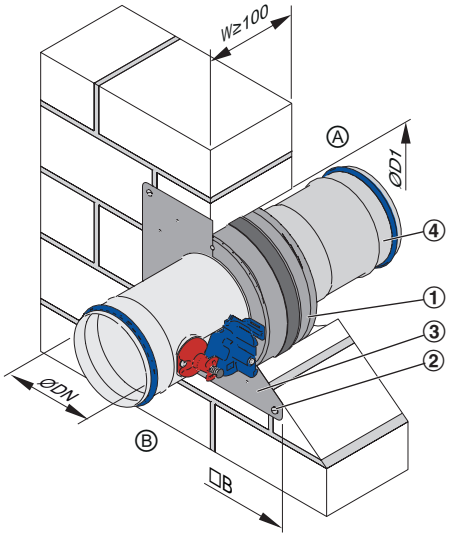

Fig. 8: Intallation with circular installation block

① Circular installation block
② Screw fixing
③ Cover plate
④ Extension piece

∅D1 Installation opening *Table on page 17*
Ⓐ Installation side
Ⓑ Operating side

Personnel:

- Specialist personnel

Requirements

- Performance class EI 90 S
- Solid walls or fire walls made of, for example, concrete, aerated concrete, masonry, or solid gypsum wallboards according to EN 12859 (without open spaces), gross density ≥ 500 kg/m³ and W ≥ 100 mm
- ≥ 75 mm distance between installation block and load-bearing structural elements
- 200 mm minimum distance between two installation blocks

1. Create an appropriate opening with ØD1 *Table on page 17*
2. Push the fire damper assembly up to the cover plate into the opening.

   If the wall thickness is >115 mm, extend the fire damper on the installation side with an extension piece or a spiral duct.
3. Fix the cover plate with at least four M6 screws. For solid walls and solid ceiling slabs, suitable steel anchors with building inspectorate approval must be used.

Dimensions of installation opening/cover plate [mm]										
Nominal size	**100**	**125**	**150**	**160**	**180**	**200**	**224**	**250**	**280**	**315**
ØD1	200	250	250	250	300	300	350	350	400	400
□B	250	300	300	300	350	350	400	400	450	450

Installation opening tolerance + 2 mm

5.4.3 Dry mortarless installation with fire batt

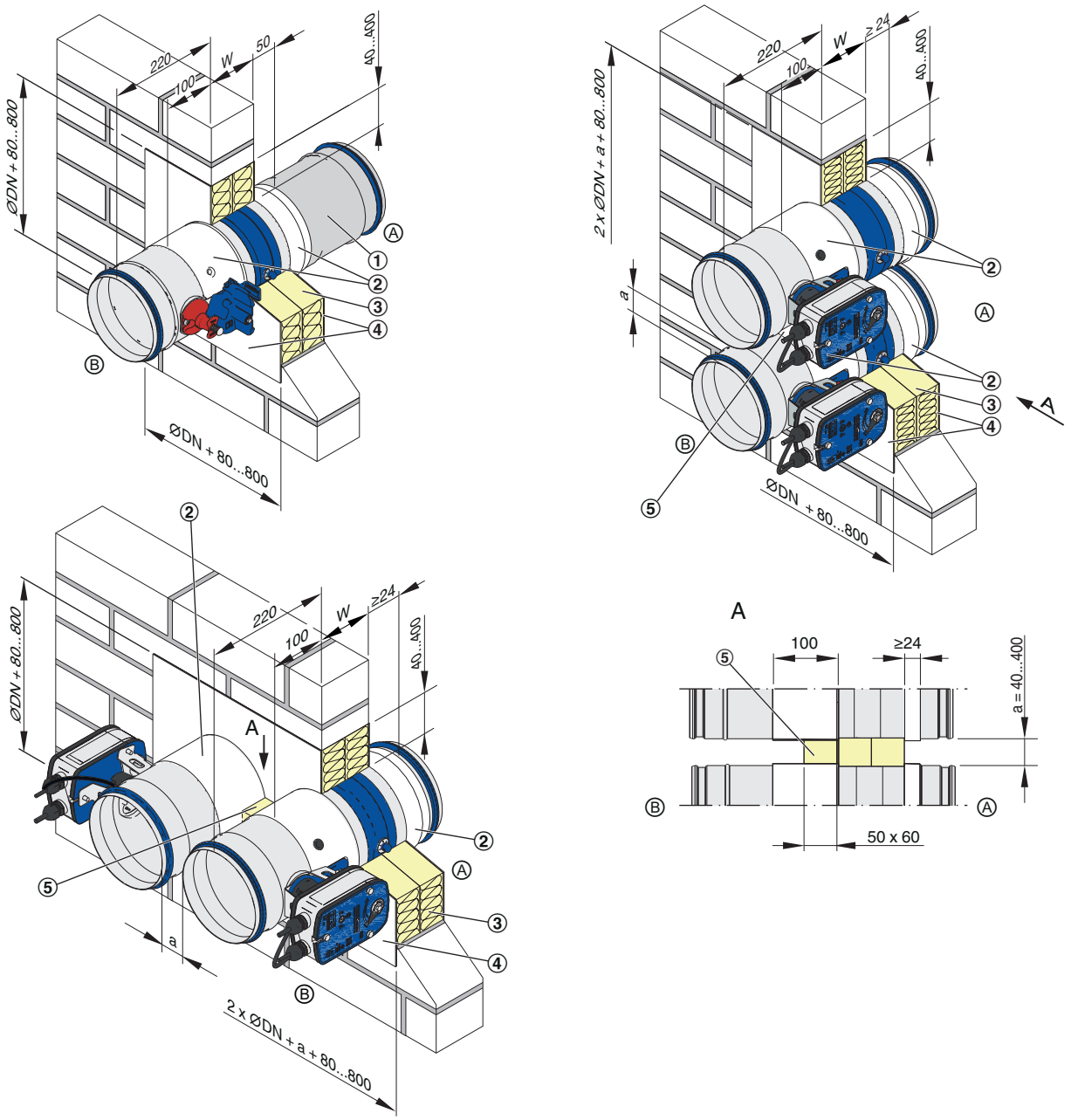

Fig. 9: Installation with fire batt

① Extension piece (if required)
② Fire protection coating
③ Coated mineral wool slabs, ≥ 140 kg/m³
④ Fire protection coating
⑤ Mineral wool strips ≥ 80 kg/m³ (only when distance a≤ 50 mm)
Ⓐ Installation side
Ⓑ Operating side

Note: Each fire damper must be suspended separately ↳ *46*.

Performance class and installation details

Perform-ance class	Fire batt	Casing construction / ØDN [mm]		Distance to load-bearing structural elements [mm]	Distance between two fire dampers [mm]	
		Galvanised steel	Stainless steel		Two installation openings	One installation opening (flange to flange)
EI 120 S	HENSEL	100...200	–	≥75	≥200	–
EI 120 S	Hilti	100...200	–	≥75		
EI 90 S	Hilti	100...315	100...200	≥40	≥200	a = 40...400
EI 90 S	HENSEL	100...315	–	≥40		

Personnel:
- Specialist personnel

Materials:
- Fire batt systems *'Acceptable fire batt systems' on page 14*

Requirements
- Performance class EI 120 S or EI 90 S *'Performance class and installation details ' Table on page 19*
- Solid walls or fire walls made of, for example, concrete, aerated concrete, masonry, or solid gypsum wallboards according to EN 12859 (without open spaces), gross density ≥ 500 kg/m³ and W ≥ 100 mm
- Duct connection with flexible connector (recommended)

1. An opening is required, see Fig. 9. 400 mm maximum distance between fire damper and wall opening
2. Push the fire damper into the installation opening and fix it with threaded rods. *46*
3. Extend the fire damper on the installation side with an extension piece (either attachment or supplied by others).

> ***Note***
> *The fire damper must have a fire protection coating (50 mm) on the installation side. The spigot of the fire damper must not be coated. This is why the fire damper requires an extension piece on the installation side; alternatively, the fire damper can be connected to the ductwork before the coating is applied.*

4. Completely close off the perimeter gap between the fire damper and the wall or ceiling slab with two layers of coated mineral wool slabs, ≥ 140 kg/m³. Apply fire protection sealant to the cut faces of the mineral wool slabs and fit them tightly into the opening. Seal any gaps between the mineral wool slabs and the trim panels, gaps between the cut faces of cut-to-size pieces, and gaps between slabs and the fire damper by applying fire protection sealant.
5. Apply fire protection coating to joints, transitions, and any imperfections on the pre-coated mineral wool slabs.
6. Apply fire protection coating, at least 2.5 mm thick, to the fire damper casing perimeter on both sides of the wall or ceiling slab. The actuator and release unit must not be coated.

5.4.4 Dry mortarless installation with wall face frame WA

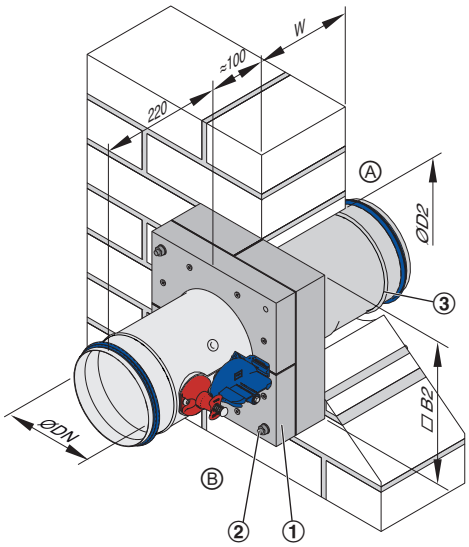

Fig. 10: Installation with wall face frame

① Wall face frame
② Screw fixing
③ Extension piece
∅D2 Installation opening *Table on page 20*
Ⓐ Installation side
Ⓑ Operating side

Personnel:

- Specialist personnel

Requirements

- Performance class EI 90 S
- Solid walls or fire walls made of, for example, concrete, aerated concrete, masonry, or solid gypsum wallboards according to EN 12859 (without open spaces), gross density ≥ 500 kg/m³ and W ≥ 100 mm
- ≥ 75 mm distance to load-bearing structural elements
- 200 mm minimum distance between two fire dampers

1. Create an appropriate opening with ØD2 *Table on page 20*
2. Extend the fire damper with an extension piece or a spiral duct on the installation side.
3. Position the fire damper with the wall face frame in the centre of the installation opening.
4. Fix the wall face frame with four threaded rods M8 (push through installation) or with anchors. For solid walls, suitable steel anchors with building inspectorate approval must be used.

Dimensions of installation opening/wall face frame [mm]										
Nominal size	**100**	**125**	**150**	**160**	**180**	**200**	**224**	**250**	**280**	**315**
ØD2	130	155	180	190	210	230	254	280	310	345
□B2	200	225	250	260	280	300	324	350	380	415

Installation opening tolerance -20 mm / 2 mm

5.5 Solid ceiling slabs

5.5.1 Mortar-based installation

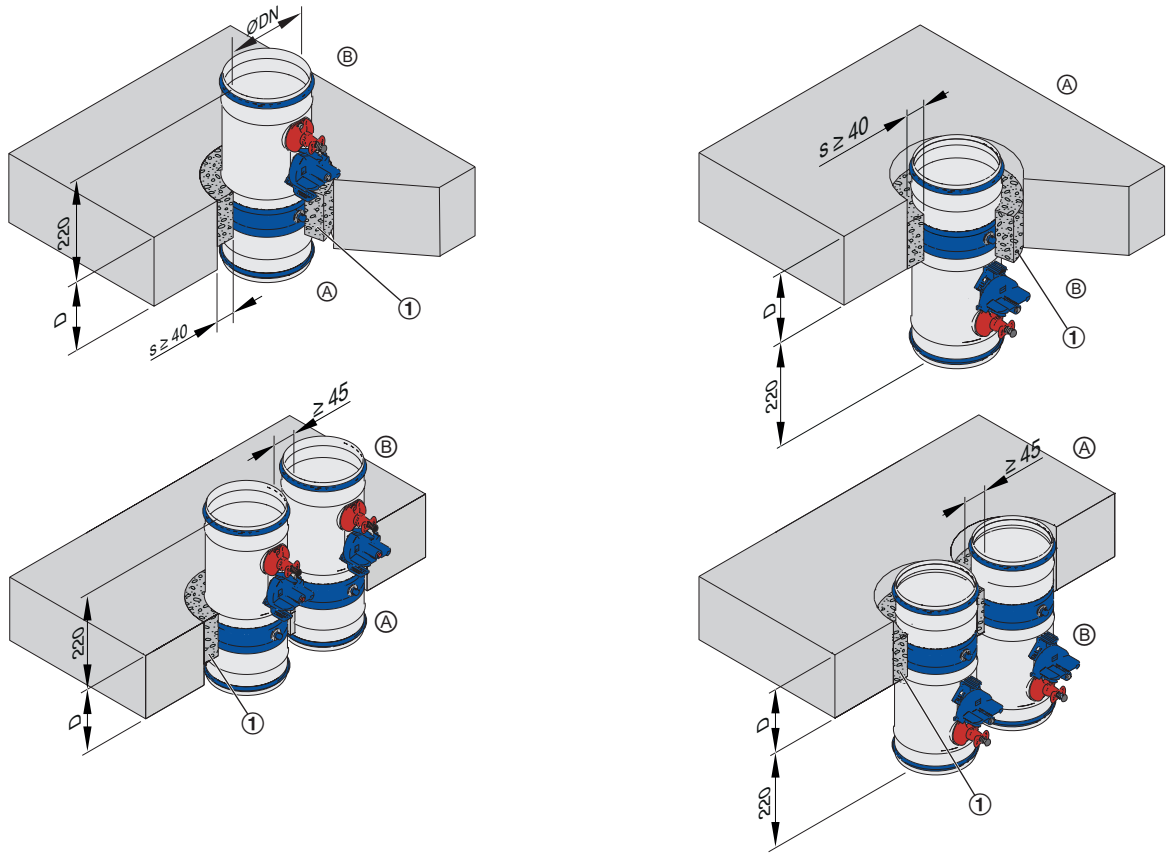

Fig. 11: Mortar-based installation into solid ceiling slab, suspended or upright

① Mortar
Ⓐ Installation side
Ⓑ Operating side

Installation after completing the ceiling slab

Personnel:

- Specialist personnel

Materials:

- Mortar *'Acceptable mortars for mortar-based installation' on page 14*

Requirements

- Performance class EI 120 S
- Solid ceiling slabs without open spaces, made of concrete or aerated concrete, gross density ≥ 600 kg/m³ and D ≥ 150 mm
- ≥ 75 mm distance to load-bearing structural elements
- 45 mm minimum distance between two fire dampers

1. Create an appropriate opening or cut hole: ØDN + at least 80 mm
2. Push the fire damper into the installation opening and secure it. Make sure that the distance from the connecting spigot on the operating side to the ceiling slab is 220 mm.

   Extend the fire damper with an extension piece or a spiral duct on the installation side.
3. Close off the perimeter gap »s« with mortar. The mortar bed depth must be at least 100 mm.

Installation while completing the ceiling slab

If the fire damper is installed as the ceiling slab is being completed, the perimeter gap »s« is not required.

Note:

- *Extend the fire damper with an extension piece or a spiral duct on the installation side.*
- *Protect the inside of damper and the operating components/actuator, e.g. with plastic foil.*

5.5.2 Dry mortarless installation with circular installation block ER

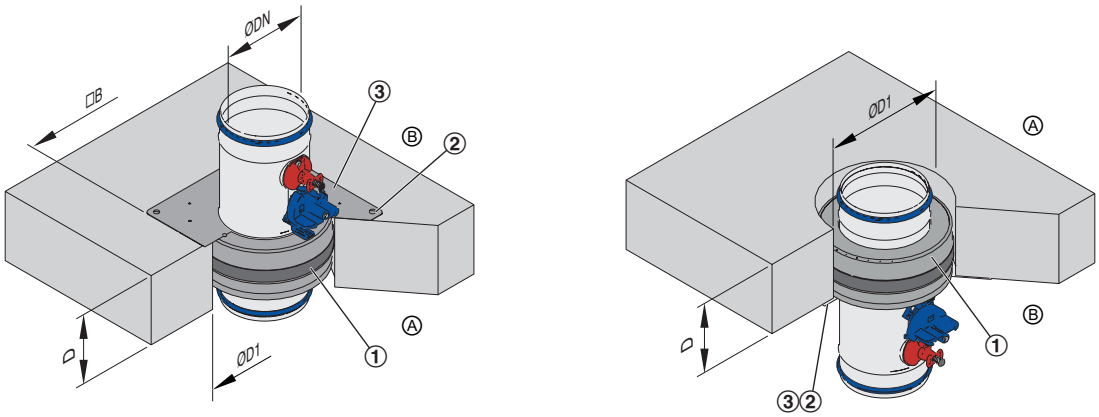

Fig. 12: Dry mortarless installation into solid ceiling slab, suspended or upright

① Installation block
② Screw fixing
③ Cover plate
∅D1 Installation opening *Table on page 23*
Ⓐ Installation side
Ⓑ Operating side

Personnel:

- Specialist personnel

Requirements

- Performance class EI 90 S
- Solid ceiling slabs without open spaces, made of concrete or aerated concrete, gross density ≥ 600 kg/m³ and D ≥ 150 mm
- ≥ 75 mm distance between installation block and load-bearing structural elements
- 200 mm minimum distance between two installation blocks

1. Create an appropriate opening with ØD1 *Table on page 23*
2. Push the fire damper assembly up to the cover plate into the opening.
3. Extend the fire damper on the installation side with an extension piece (either attachment or supplied by others).
4. Fix the cover plate with at least four M6 screws. For solid walls and solid ceiling slabs, suitable steel anchors with building inspectorate approval must be used.

Dimensions of installation opening/cover plate [mm]										
Nominal size	**100**	**125**	**150**	**160**	**180**	**200**	**224**	**250**	**280**	**315**
ØD1	200	250	250	250	300	300	350	350	400	400
□B	250	300	300	300	350	350	400	400	450	450

Installation opening tolerance + 2 mm

5.5.3 Dry mortarless installation with fire batt

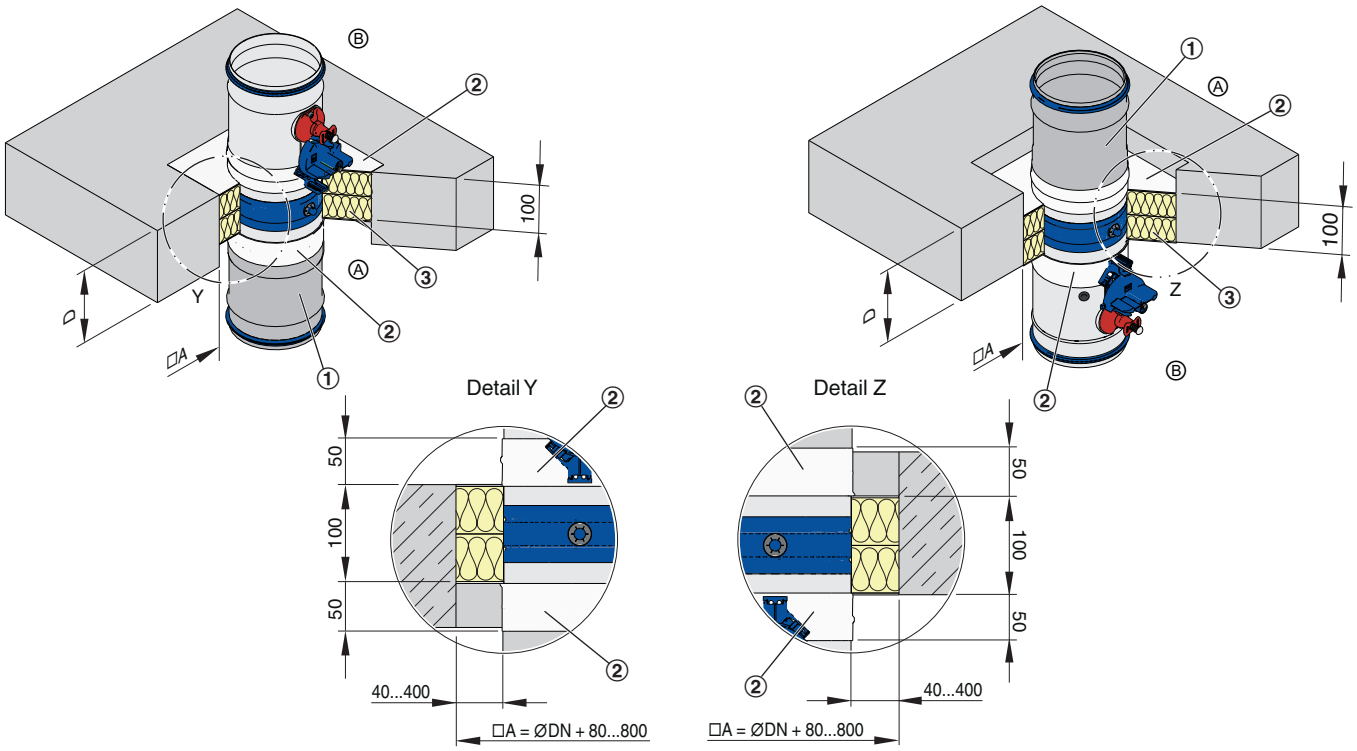

Fig. 13: Installation with fire batt, suspended or upright

① Extension piece
② Fire protection coating
③ Coated mineral wool slabs, ≥ 140 kg/m³
Ⓐ Installation side
Ⓑ Operating side
Y Fire batt, flush with the floor (only for upright installation)
Z Fire batt, flush with the ceiling (only for suspended installation)

Personnel:

- Specialist personnel

Materials:

- Fire batt systems ↳ *'Acceptable fire batt systems' on page 14*

Requirements

- Performance class EI 90 S
- Solid ceiling slabs without open spaces, made of concrete or aerated concrete, gross density ≥ 600 kg/m³ and D ≥ 150 mm
- ≥ 75 mm distance to load-bearing structural elements
- 200 mm minimum distance between two fire dampers
- Duct connection with flexible connector (recommended)

1. ▸ An opening or a cut hole is required (□A = ∅DN + 80...800 mm), with 400 mm maximum distance between the fire damper and the wall opening
2. ▸ Push the fire damper into the wall opening and fix it with threaded rods ↳ *Chapter 5.9.3.2 'Vertical duct' on page 47*.

   Make sure that the distance from the connecting spigot on the operating side to the ceiling slab is 220 mm.
3. ▸ Extend the fire damper on the installation side with an extension piece (either attachment or supplied by others).

> **Note**
> *The fire damper must have a fire protection coating (50 mm) on the installation side. The spigot of the fire damper must not be coated. This is why the fire damper requires an extension piece on the installation side; alternatively, the fire damper can be connected to the ductwork before the coating is applied.*

4. ▸ Completely close off the perimeter gap between the fire damper and the wall or ceiling slab with two layers of coated mineral wool slabs, ≥ 140 kg/m³. Apply fire protection sealant to the cut faces of the mineral wool slabs and fit them tightly into the opening. Seal any gaps between the mineral wool slabs and the trim panels, gaps between the cut faces of cut-to-size pieces, and gaps between slabs and the fire damper by applying fire protection sealant.
5. ▸ Apply fire protection coating to joints, transitions, and any imperfections on the pre-coated mineral wool slabs.
6. ▸ Apply fire protection coating, at least 2.5 mm thick, to the fire damper casing perimeter on both sides of the wall or ceiling slab. The actuator and release unit must not be coated.

5.5.4 Mortar-based installation into concrete bases

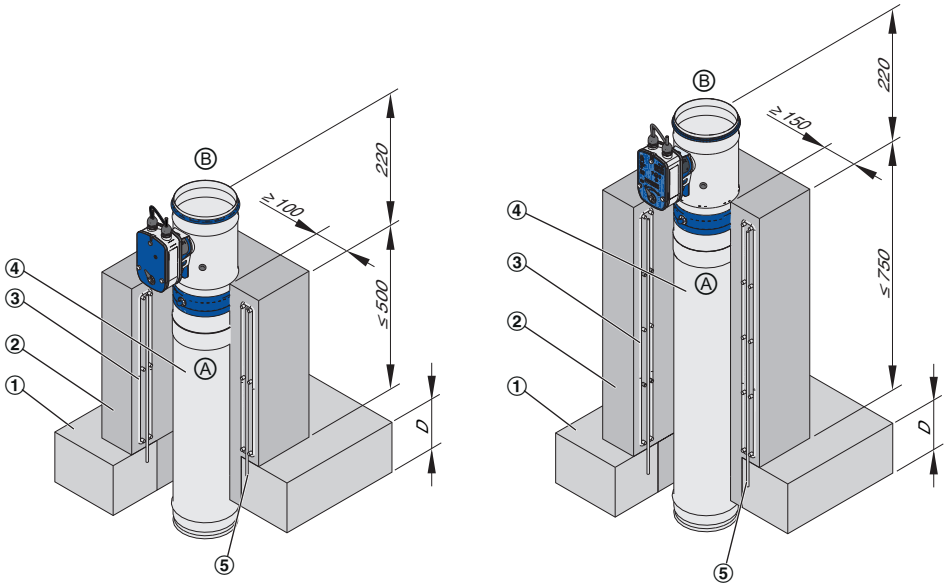

Fig. 14: Installation with concrete base into solid ceiling slab

①	Solid ceiling slab	④	Duct
②	Concrete base	Ⓐ	Installation side
③	Reinforcement	Ⓑ	Operating side

Installation after completing the ceiling slab

Personnel:
- Specialist personnel

Requirements
- Performance class EI 120 S
- Solid ceiling slabs without open spaces, made of concrete or aerated concrete, gross density ≥ 600 kg/m³ and D ≥ 150 mm
- 45 mm minimum distance between two fire dampers
- ≥ 75 mm distance to load-bearing structural elements

1. ▸ Attach the new fire damper to the old fire damper
2. ▸ Create concrete base, for a reinforcement plan see Fig. 15.

   No reinforcement is required for bases with a height of ≤ 50 mm.

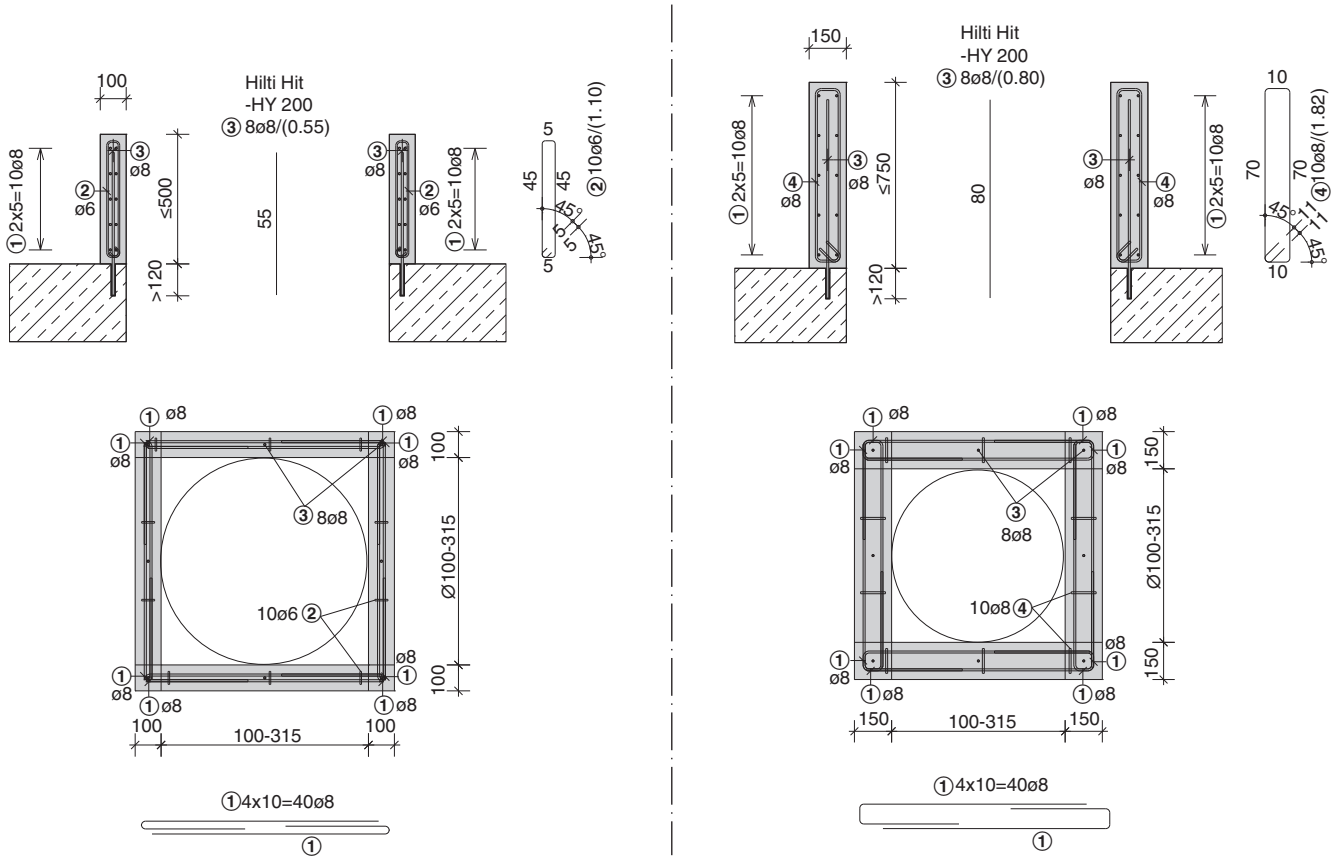

Fig. 15: Reinforcement plan for concrete base with a height of 500 mm or 750 mm

① Reinforcing steel ∅8 mm
② Reinforcing steel ∅6 mm
③ Reinforcing steel ∅8 mm, mortared into the ceiling slab with Hilti-HY200 or equivalent
④ Reinforcing steel ∅8 mm

5.6 Lightweight partition walls

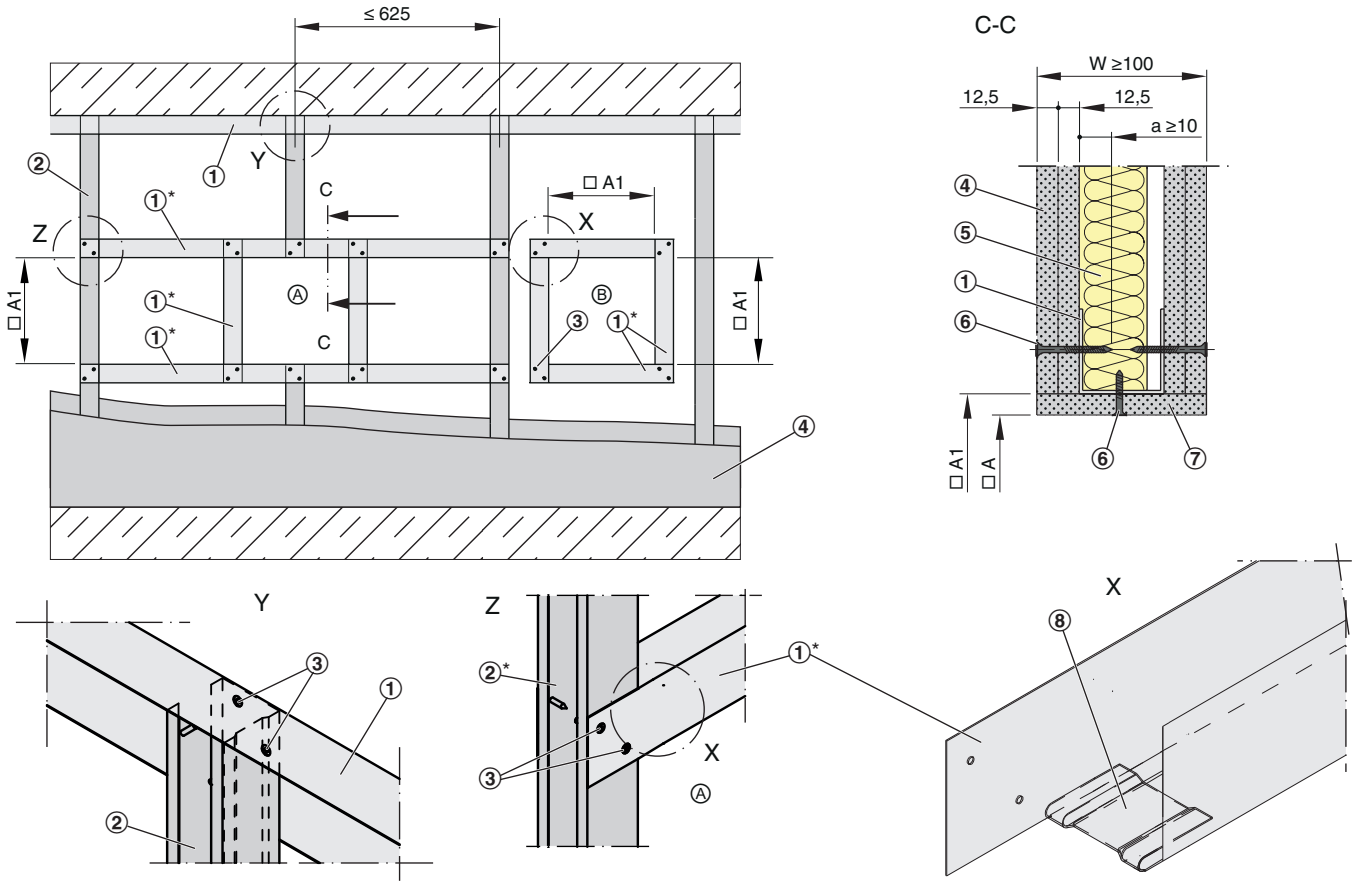

Fig. 16: Lightweight partition wall with metal support structure and cladding on both sides

① UW section
② CW section
③ Screw or steel rivet
④ Double layer cladding, on both sides of the metal stud system
⑤ Mineral wool (depending on wall construction)
⑥ Dry wall screw
⑦ Trim panels, according to the installation details
⑧ Fold the tab inward or cut it off
* closed end must face installation opening □A

Requirements

- Lightweight partition walls with metal support structure and cladding on both sides, with European classification to EN 13501-2 or equivalent national classification
- Cladding on both sides made of gypsum bonded or cement bonded panel materials or fibre-reinforced gypsum, wall thickness W ≥ 100 mm
- ≤ 625 mm distance between metal studs
- The installation opening must be stabilised with a reinforcing section or with horizontal and vertical sections
- Additional layers of cladding or double stud systems are approved
- Duct connection with flexible connector (recommended)

Erecting a wall and creating an installation opening

- Erect the lightweight partition wall according to the manufacturer's instructions and create an installation opening, see Fig. 16
- – Option Ⓐ: Provide the installation opening in the metal support structure with support profiles.
  – Option Ⓑ: After cladding the wall, create a square wall opening and brace it with a perimeter metal section.

Installation opening □A [mm]											
Installation type		**Nominal size**									
		100	**125**	**150**	**160**	**180**	**200**	**224**	**250**	**280**	**315**
Mortar-based installation [1]		□A = DN + 80... 120 mm									
Dry mortarless installation with dry mortarless installation kit TQ [2]	□A	210	235	260	270	300	310	334	360	390	425
	□B1	300	325	350	360	380	400	424	450	480	515
Dry mortarless installation with fire batt [3]		□A1 = ∅ DN + 80...800 mm + 2 × trim panel thickness									

[1)] Optional trim panels

[2)] Installation opening tolerance +2 mm

[3)] Trim panels are required

5.6.1 Mortar-based installation

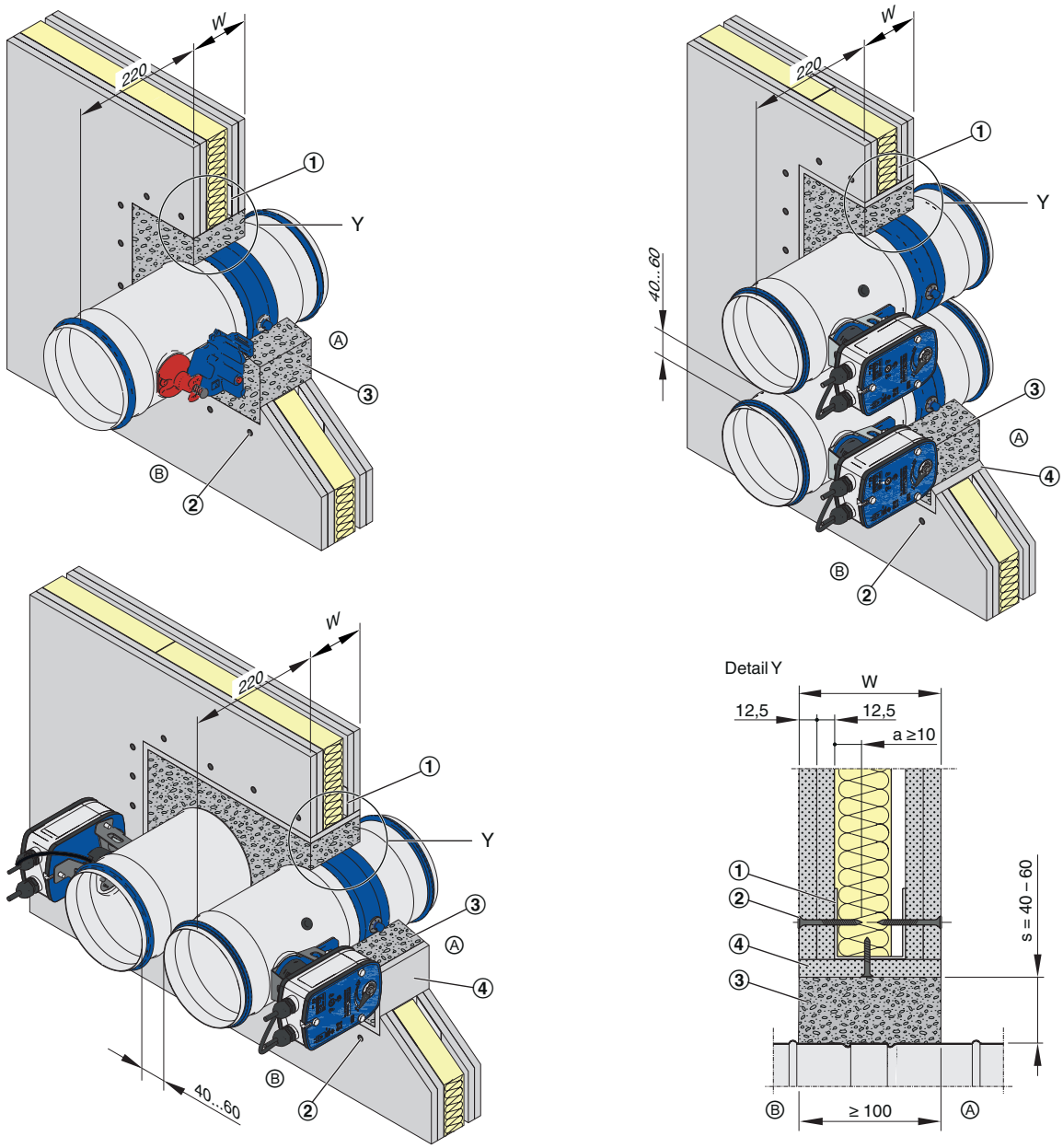

Fig. 17: Mortar-based installation

① Perimeter metal section
② Dry wall screw
③ Mortar
④ Trim panels (optional; required for flange-to-flange installation)
Ⓐ Installation side
Ⓑ Operating side

For details on the installation into walls of different thickness see Fig. 18

Performance class and installation details

Performance class	ØDN [mm]	Distance to load-bearing structural elements [mm]	Distance between two fire dampers [mm]	
			Two installation openings	One installation opening (flange to flange)
EI 120 S	100...200	≥75	≥200	–
EI 90 S	100...315	≥40	≥200	40...60

Personnel:

- Specialist personnel

Materials:

- Mortar *‘Acceptable mortars for mortar-based installation’ on page 14*

Requirements

- Performance class EI 120 S or EI 90 S *‘Performance class and installation details ’ Table on page 29*
- Lightweight partition walls with metal support structure and cladding on both sides, W ≥ 100 mm; detailed specification *on page 27*.
- Duct connection with flexible connector (recommended)

1. Erect the lightweight partition wall according to the manufacturer's instructions and create an installation opening *on page 27*.
2. Push the fire damper into the installation opening and secure it. Make sure that the distance from the connecting spigot on the operating side to the wall is 220 mm.

   If the wall thickness is >115 mm, extend the fire damper on the installation side with an extension piece or a spiral duct.
3. Close off the perimeter gap »s« with mortar.

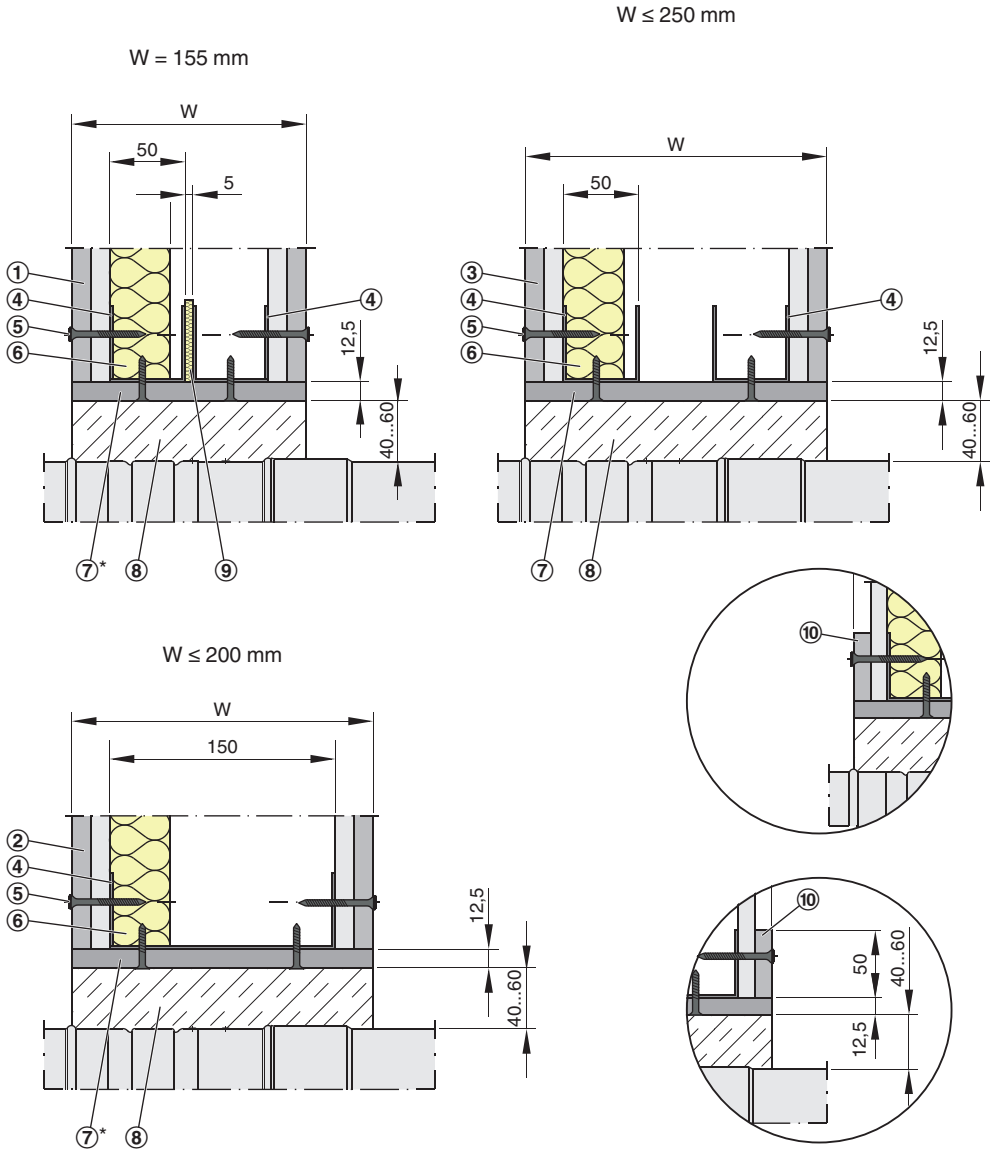

Fig. 18: Mortar-based installation into lightweight partition walls, W≥ 155 mm

① F90 wall, double stud system, W = 155 mm (W = 155 mm shown)
② F90 wall, single stud system, W ≤ 200 mm (W = 200 mm shown)
③ F90 wall, double stud system, W ≤ 250 mm (W = 200 mm shown)
④ Perimeter metal section
⑤ Dry wall screw
⑥ Mineral wool (depending on wall construction)
⑦ Trim panels
⑧ Mortar
⑨ Insulating strip
⑩ Perimeter reinforcing board, 12.5 × 50 mm, required only for F30 walls
* optional

Installation details for other wall types are available on request

5.6.2 Dry mortarless installation with square dry mortarless installation kit TQ

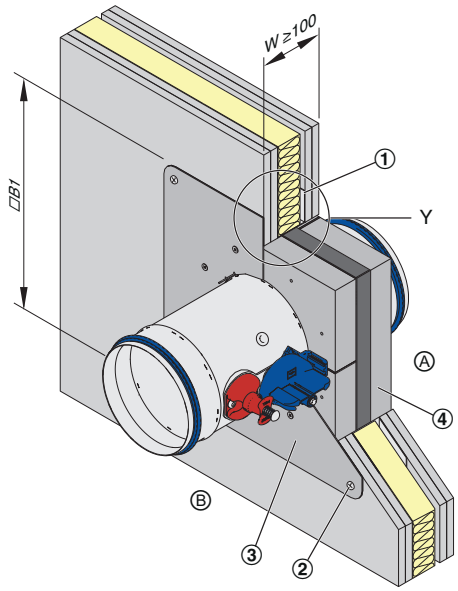

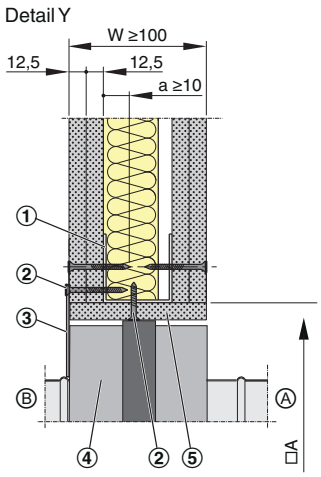

Fig. 19: Dry mortarless installation with square installation kit TQ

① Perimeter metal section
② Dry wall screw
③ Cover plate
④ Installation kit TQ
⑤ Optional trim panels for W = 100 mm
Ⓐ Installation side
Ⓑ Operating side

For details on the installation into walls of different thickness see Fig. 20

Personnel:

- Specialist personnel

Requirements

- Performance class EI 90 S; for ∅DN ≤ 200 EI 120 S
- Lightweight partition walls with metal support structure and cladding on both sides, W ≥ 100 mm; detailed specification ↳ *on page 27*.
- ≥ 75 mm distance to load-bearing structural elements (≥ 100 mm depending on construction)
- 200 mm minimum distance between two fire dampers
- Duct connection with flexible connector (recommended)

1. ▸ Erect the lightweight partition wall according to the manufacturer's instructions and create an installation opening ↳ *on page 27*.
2. ▸ Push the fire damper assembly up to the cover plate into the opening.

   If the wall thickness is >115 mm, extend the fire damper on the installation side with an extension piece or a spiral duct.
3. ▸ Fix the cover plate with at least four screws (dry wall screws ∅ ≥ 4.2 mm, a ≥ 10 mm) to the perimeter metal section.

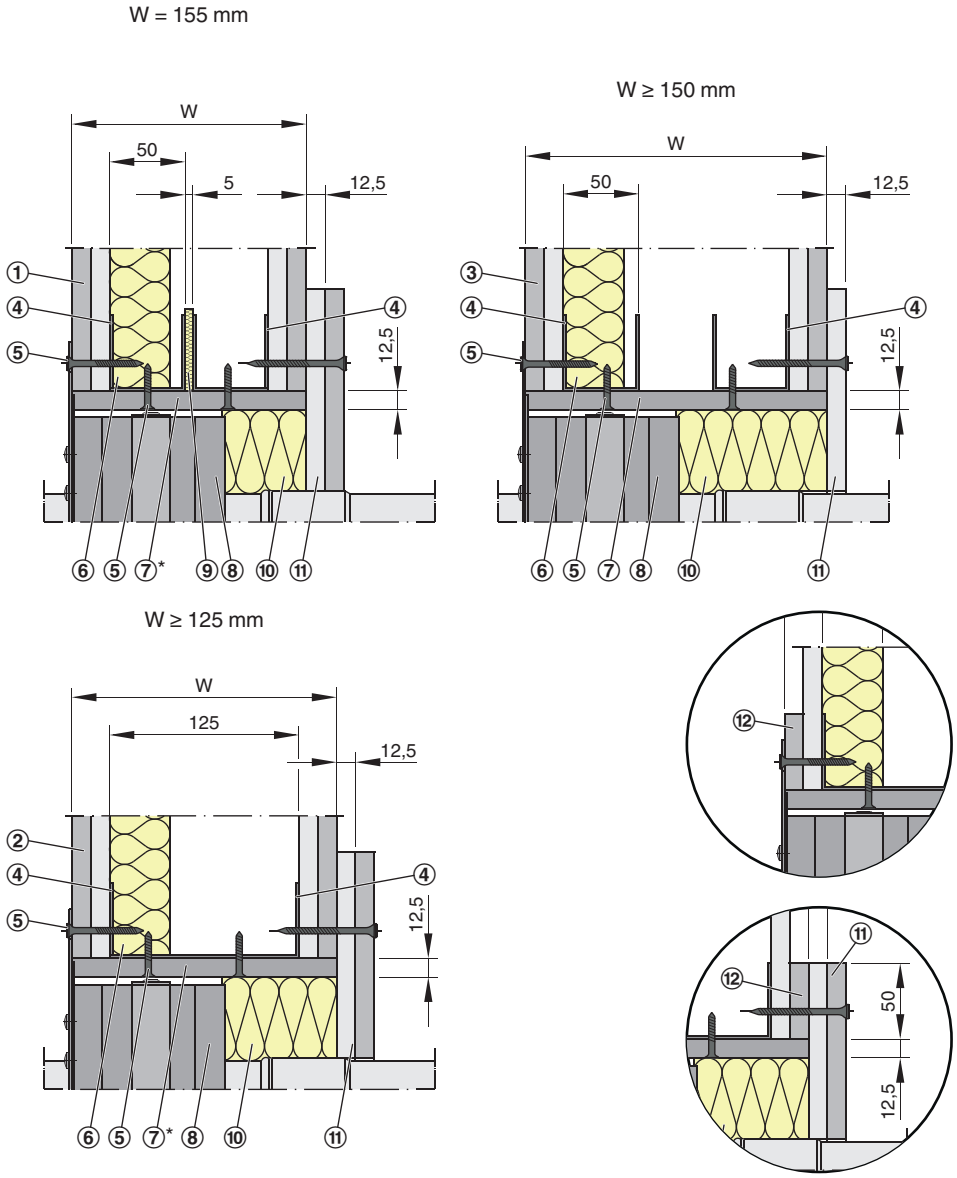

Fig. 20: Dry mortarless installation into lightweight partition walls, W > 125 mm

① Double stud system, W = 155 mm (W = 155 mm shown)
② Single stud system, W ≥ 125 mm (W = 175 mm shown)
③ Double stud system, W ≥ 150 mm (W = 200 mm shown)
④ Perimeter metal sections
⑤ Dry wall screw
⑥ Mineral wool (depending on wall construction)
⑦ Trim panels
⑧ Installation kit
⑨ Insulating strip
⑩ Infill (mineral wool A1 ≥ 50 kg/m³ or gypsum mortar)
⑪ Reinforcing board, made of wall panels, up to the fire damper casing
⑫ Perimeter reinforcing board, 12.5 × 50 mm, required only for F30 walls
* optional

5.6.3 Dry mortarless installation with fire batt

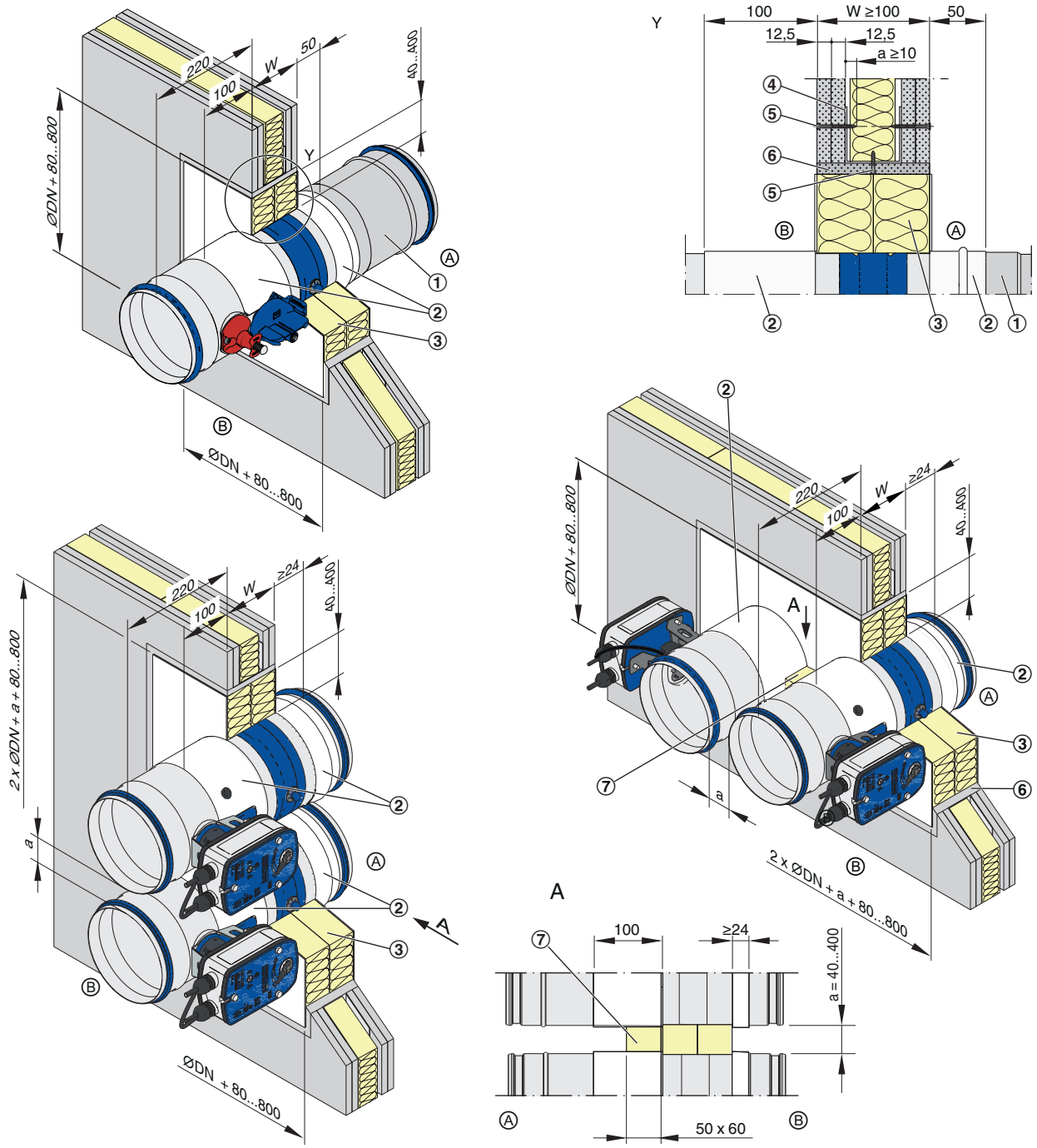

Fig. 21: Dry mortarless installation with fire batt

① Extension piece (if required)
② Fire protection coating
③ Coated mineral wool slabs, ≥ 140 kg/m³
④ Perimeter metal section
⑤ Dry wall screw (for cladding)
⑥ Trim panels
⑦ Mineral wool strips ≥ 80 kg/m³ (only when distance a≤ 50 mm)
Ⓐ Installation side
Ⓑ Operating side

Note: Each fire damper must be suspended separately *46*.

Performance class and installation details

Perform-ance class	Fire batt	Casing construction / ØDN [mm]		Distance to load-bearing structural elements [mm]	Distance between two fire dampers [mm]	
		Galvanised steel	Stainless steel		Two installation openings	One installation opening (flange to flange)
EI 120 S	HENSEL	100...200	–	≥75	≥200	–
EI 120 S	Hilti	100...200	–	≥75		
EI 90 S	Hilti	100...315	100...200	≥40	≥200	a = 40...400
EI 90 S	HENSEL	100...315	–	≥40		

Personnel:
- Specialist personnel

Materials:
- Fire batt systems *'Acceptable fire batt systems' on page 14*

Requirements
- Performance class EI 120 S or EI 90 S *'Performance class and installation details ' Table on page 35*
- Lightweight partition walls with metal support structure and cladding on both sides, W ≥ 100 mm; detailed specification *on page 27*.
- Duct connection with flexible connector (recommended)

1. Erect the lightweight partition wall according to the manufacturer's instructions and create an installation opening *27*.
2. Push the fire damper into the wall opening and fix it with threaded rods *46*.
3. Extend the fire damper on the installation side with an extension piece (either attachment or supplied by others).

> ***Note***
> *The fire damper must have a fire protection coating (50 mm) on the installation side. The spigot of the fire damper must not be coated. This is why the fire damper requires an extension piece on the installation side; alternatively, the fire damper can be connected to the ductwork before the coating is applied.*

4. Completely close off the perimeter gap between the fire damper and the wall or ceiling slab with two layers of coated mineral wool slabs, ≥ 140 kg/m³. Apply fire protection sealant to the cut faces of the mineral wool slabs and fit them tightly into the opening. Seal any gaps between the mineral wool slabs and the trim panels, gaps between the cut faces of cut-to-size pieces, and gaps between slabs and the fire damper by applying fire protection sealant.
5. Apply fire protection coating to joints, transitions, and any imperfections on the pre-coated mineral wool slabs.
6. Apply fire protection coating, at least 2.5 mm thick, to the fire damper casing perimeter on both sides of the wall or ceiling slab. The actuator and release unit must not be coated.

5.6.4 Dry mortarless installation with installation kit GL

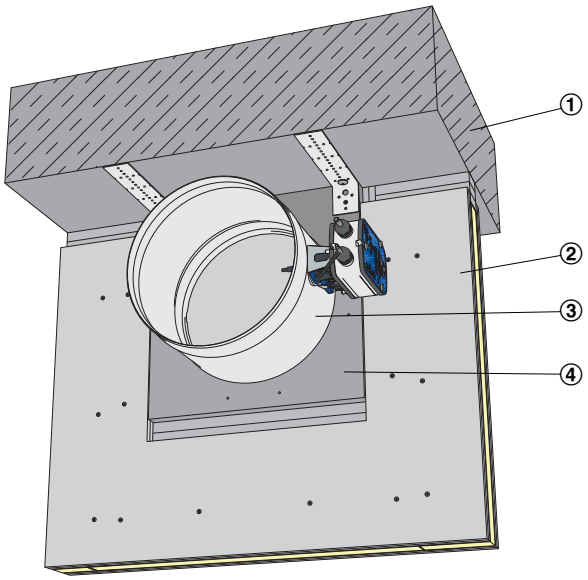

Fig. 22: Installation into lightweight partition wall with flexible ceiling joint, using dry mortarless installation kit GL

① Solid ceiling slab
② Lightweight partition wall
③ FKRS-EU
④ Installation kit GL

Personnel:

- Specialist personnel

Requirements

- Performance class EI 90 S
- Lightweight partition walls with metal support structure and cladding on both sides, W ≥ 100 mm; detailed specification *on page 27*.
- Wall thickness W = 100 – 235 mm
- 50 – 230 mm distance to the ceiling slab
- ≥ 50 mm distance to load-bearing structural elements
- ≥ 200 mm distance between two dry mortarless installation kits
- Subsidence of the ceiling slab a ≤ 40 mm

For installation, follow the supplied installation manual.

5.7 Fire walls

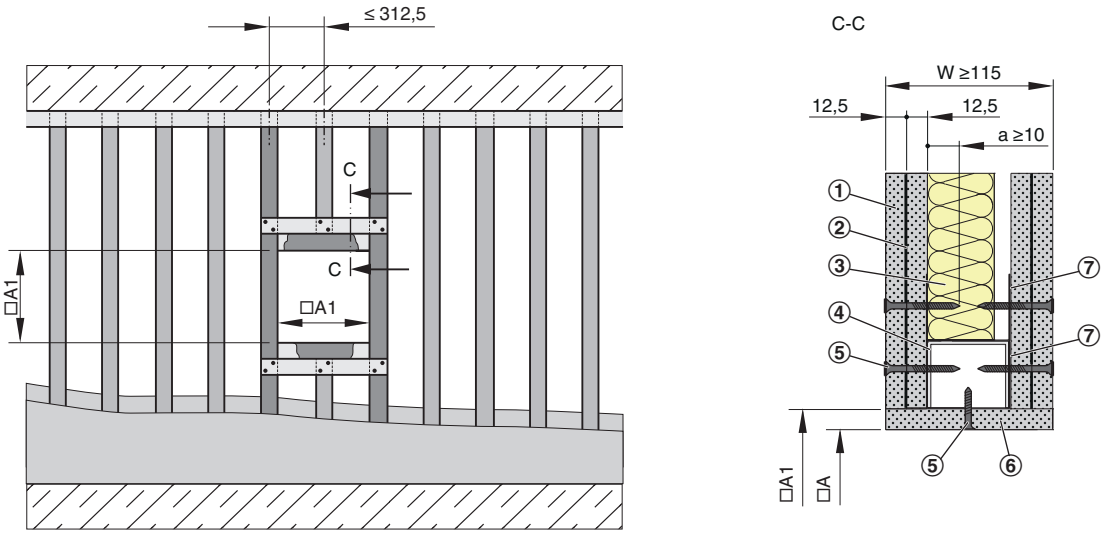

Fig. 23: Fire wall

① Double layer cladding, on both sides of the metal stud system
② Sheet steel insert
③ Mineral wool (depending on wall construction)
④ UA section
⑤ Dry wall screw
⑥ Trim panels (according to the installation details)
⑦ UW section
□A Installation opening

Requirements

- Fire walls with a metal support structure and cladding on both sides, with European classification to EN 13501-2 or equivalent national national classification
- Cladding on both sides made of gypsum bonded or cement bonded panel materials or fibre-reinforced gypsum, wall thickness W ≥ 115 mm
- ≤ 312.5 mm distance between metal studs
- Wall height ≤ 5,000 mm
- Sheet steel inserts, additional layers of cladding, or double stud systems are approved
- Duct connection with flexible connector (recommended)

Installation opening □A [mm]											
Installation type		**Nominal size**									
		100	**125**	**150**	**160**	**180**	**200**	**224**	**250**	**280**	**315**
Mortar-based installation[1]		□A = ∅ DN + (2 x s)									
Dry mortarless installation with square dry mortarless installation kit TQ[2, 3]	□A	210	235	260	270	290	310	334	360	390	425
	□B1	300	325	350	360	380	400	424	450	480	515

s = 40...60 mm

[1] Optional trim panels

[2] Trim panels are required, □A1 = □A + 2 x trim panel thickness

[3] Installation opening tolerance +2mm

Metal stud system

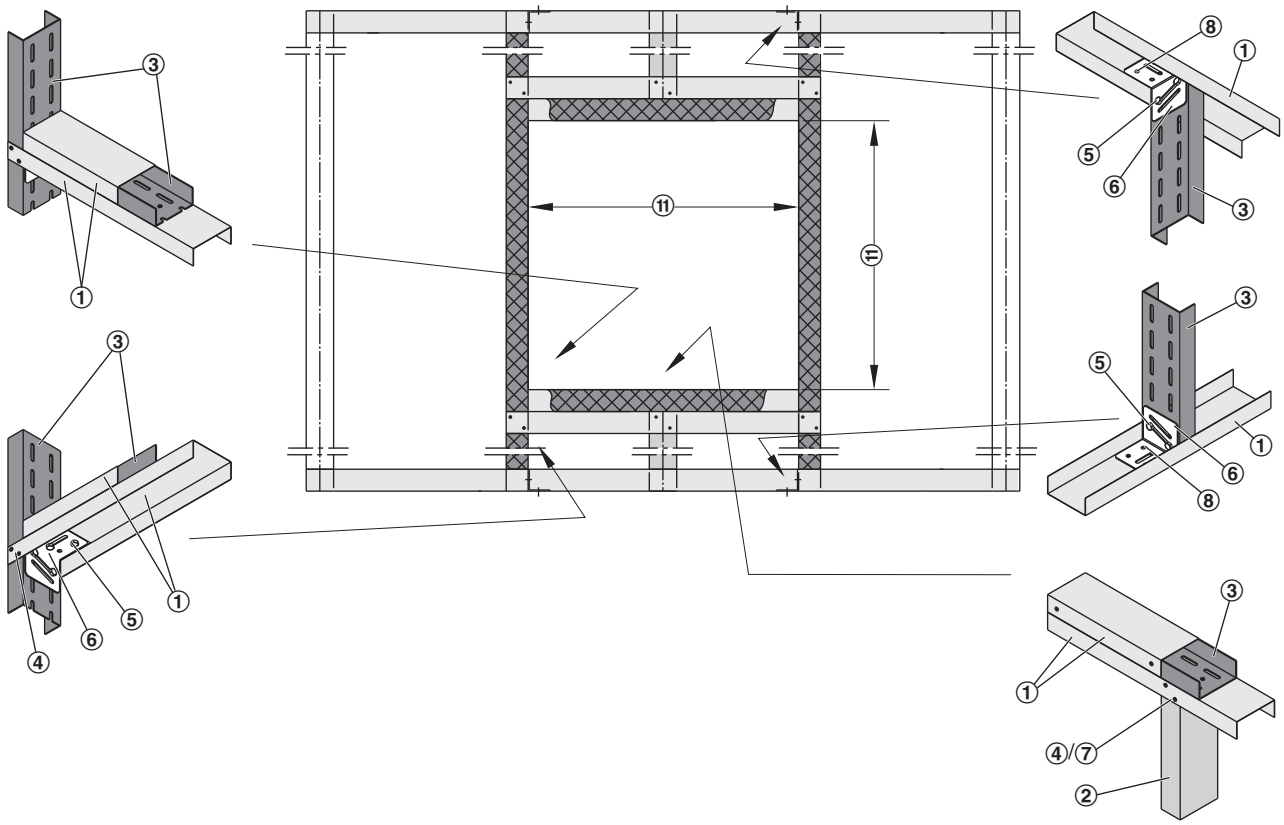

Fig. 24: Single stud system

① UW section
② CW section
③ UA section
④ Dry wall screw TB
⑤ Carriage bolt, L ≤ 50 mm, with nut and washer
⑥ Bracket
⑦ Steel rivet Ø 4 mm
⑧ 2 × screw, Ø 6 mm, with anchor or hammer-in fixing
⑨ Dry wall screw Ø 3.9 × 35 mm
⑩ UA connecting bracket; construction elements according to manufacturer's instructions
⑪ Installation opening depending on installation type
on page 37

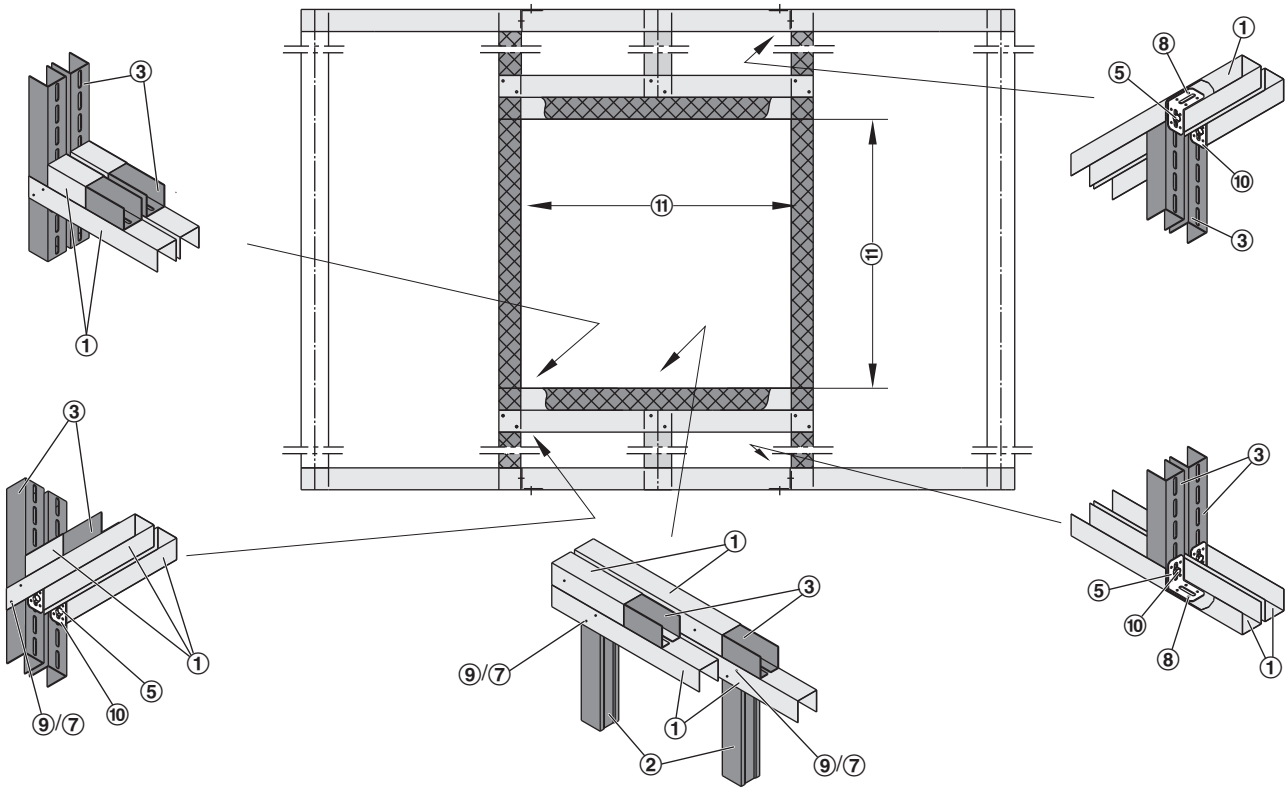

Fig. 25: Double stud system

① UW section
② CW section
③ UA section
④ Dry wall screw TB
⑤ Carriage bolt, L ≤ 50 mm, with nut and washer
⑥ Bracket
⑦ Steel rivet Ø 4 mm
⑧ 2 × screw, Ø 6 mm, with anchor or hammer-in fixing
⑨ Dry wall screw Ø 3.9 × 35 mm
⑩ UA connecting bracket; construction elements according to manufacturer's instructions
⑪ Installation opening depending on installation type *on page 37*

5.7.1 Mortar-based installation

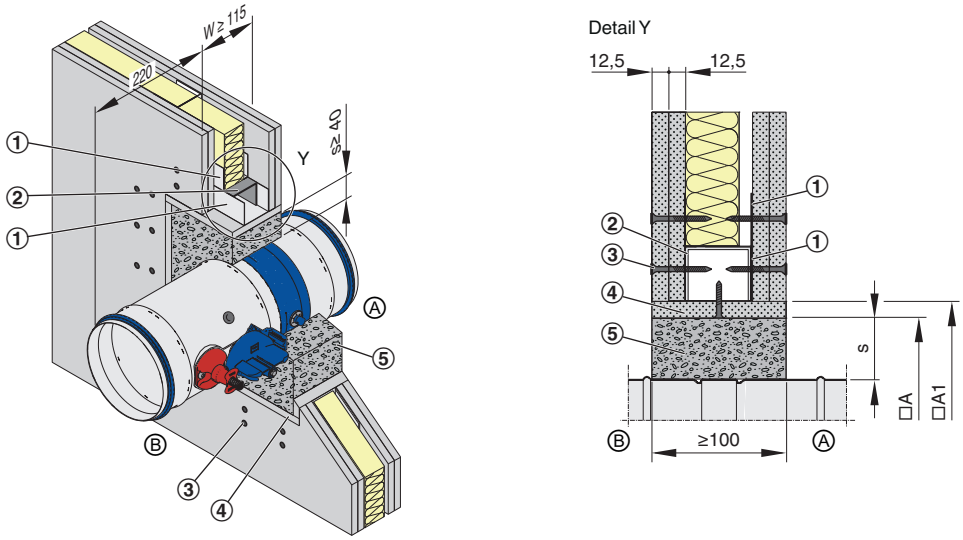

Fig. 26: Mortar-based installation

① UW section, perimeter
② UA section, perimeter
③ Dry wall screw
④ Optional trim panels
⑤ Mortar
Ⓐ Installation side
Ⓑ Operating side
s = 40 to 60 mm

Personnel:

- Specialist personnel

Materials:

- Mortar *'Acceptable mortars for mortar-based installation' on page 14*

Requirements

- Performance class EI 90 S
- Fire walls with metal support structure and cladding on both sides, W ≥ 115 mm; detailed specification *on page 37*.
- ≥ 40 mm distance to load-bearing structural elements
- 200 mm minimum distance between two fire dampers
- Duct connection with flexible connector (recommended)

1. Erect the fire wall according to the manufacturer's instructions and create an installation opening *on page 37*.
2. Push the fire damper into the installation opening and secure it. Make sure that the distance from the connecting spigot on the operating side to the wall is 220 mm.

   If the wall thickness is >115 mm, extend the fire damper on the installation side with an extension piece or a spiral duct.
3. Close off the perimeter gap »s« with mortar.

5.7.2 Dry mortarless installation with square dry mortarless installation kit TQ

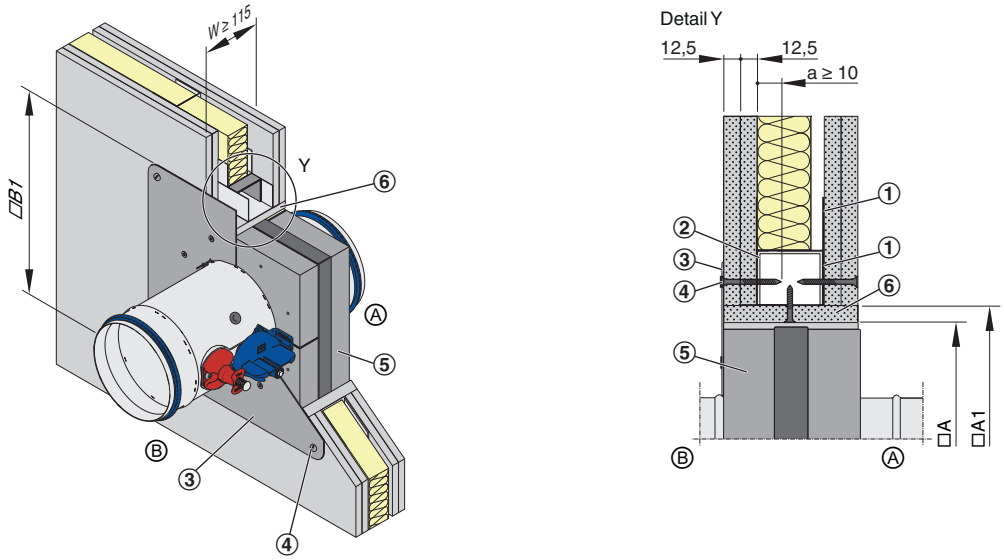

Fig. 27: Dry mortarless installation with square installation kit TQ

① UW section, perimeter
② UA section, perimeter
③ Cover plate
④ Dry wall screw
⑤ Installation kit TQ
⑥ Trim panels
Ⓐ Installation side
Ⓑ Operating side

Personnel:

- Specialist personnel

Requirements

- Performance class EI 90 S
- Fire walls with metal support structure and cladding on both sides, W ≥ 115 mm; detailed specification *on page 37*.
- ≥ 75 mm distance to load-bearing structural elements (≥ 100 mm depending on construction)
- 200 mm minimum distance between two fire dampers
- Duct connection with flexible connector (recommended)

1. Erect the fire wall according to the manufacturer's instructions and create an installation opening *on page 37*
2. Push the fire damper assembly up to the cover plate into the opening.

   If the wall thickness is >115 mm, extend the fire damper on the installation side with an extension piece or a spiral duct.
3. Fix the cover plate with at least four screws (dry wall screws ∅ ≥ 4.2 mm, a ≥ 10 mm) to the perimeter metal section.

5.8 Shaft walls

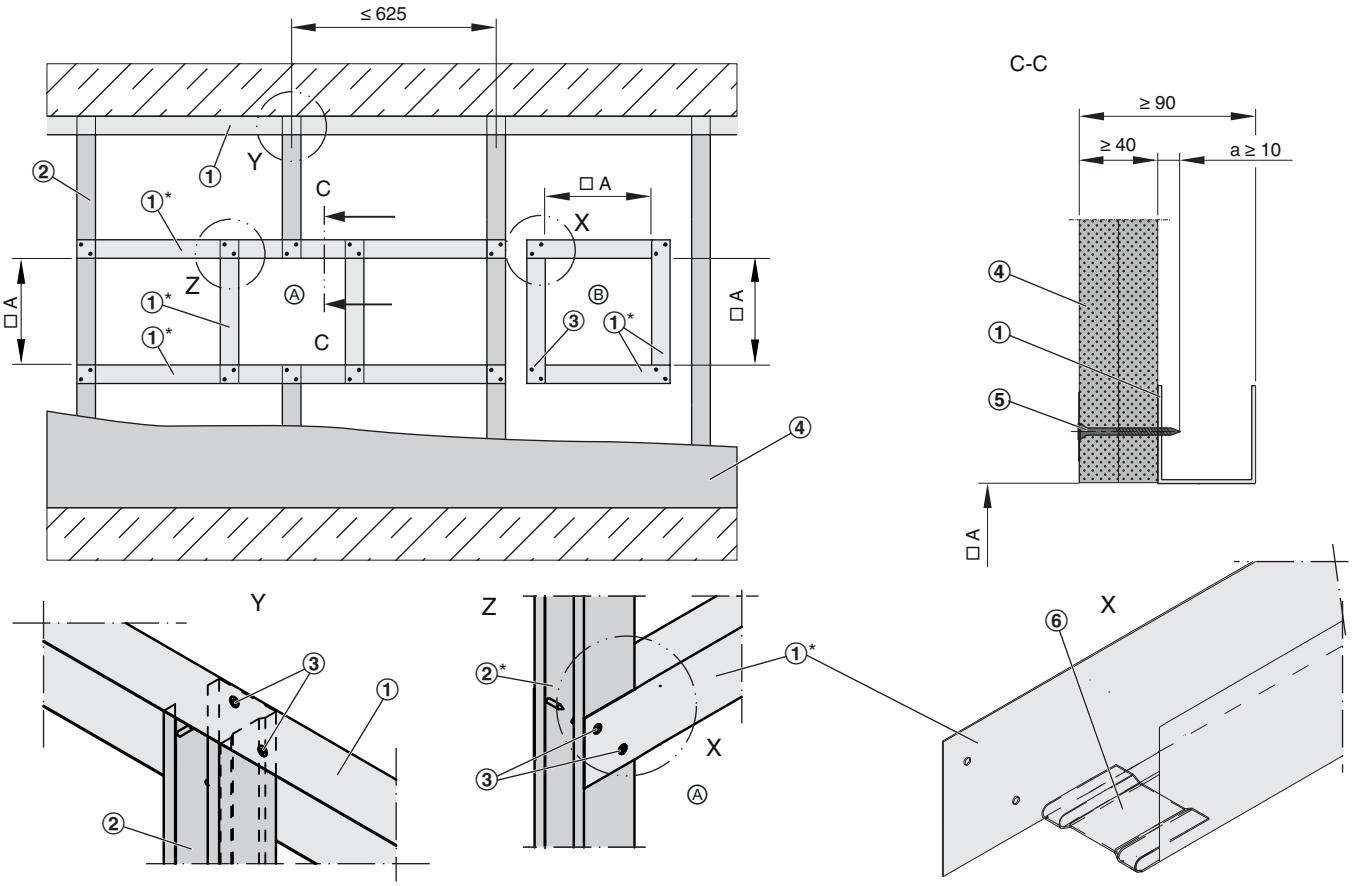

Fig. 28: Lightweight partition wall with metal support structure and cladding on one side

① UW section
② CW section
③ Screw or steel rivet
④ Double layer cladding, on one side of the metal stud system
⑤ Dry wall screw
⑥ Fold the tab inward or cut it off
* closed end must face installation opening □A

Requirements

- Lightweight partition walls with metal support structure and cladding on one side, with European classification according to EN 13501-2 or equivalent national classification
- Cladding on one side made of gypsum bonded or cement bonded panel materials or fibre-reinforced gypsum, wall thickness W ≥ 90 mm
- ≤ 625 mm distance between metal studs
- Wall height ≤ 5,000 mm
- The installation opening must be stabilised with a reinforcing section or with horizontal and vertical sections
- Duct connection with flexible connector (recommended)

Erecting a wall and creating an installation opening

- Erect the lightweight partition wall according to the manufacturer's instructions and create an installation opening, see Fig. 28
- – Option Ⓐ: Provide the installation opening in the metal support structure with support sections.
  – Option Ⓑ: After cladding the wall, create a square wall opening and brace it with a perimeter metal section.

Installation opening □A [mm]											
Installation type		**Nominal size**									
		100	**125**	**150**	**160**	**180**	**200**	**224**	**250**	**280**	**315**
Mortar-based installation		□A = ∅DN + 80... 120 mm									
Dry mortarless installation with square installation block EQ 1	□A	200	250	250	250	300	300	350	350	400	400
	□B	250	300	300	300	350	350	400	400	450	450

[1)] Installation opening tolerance +2 mm

5.8.1 Mortar-based installation

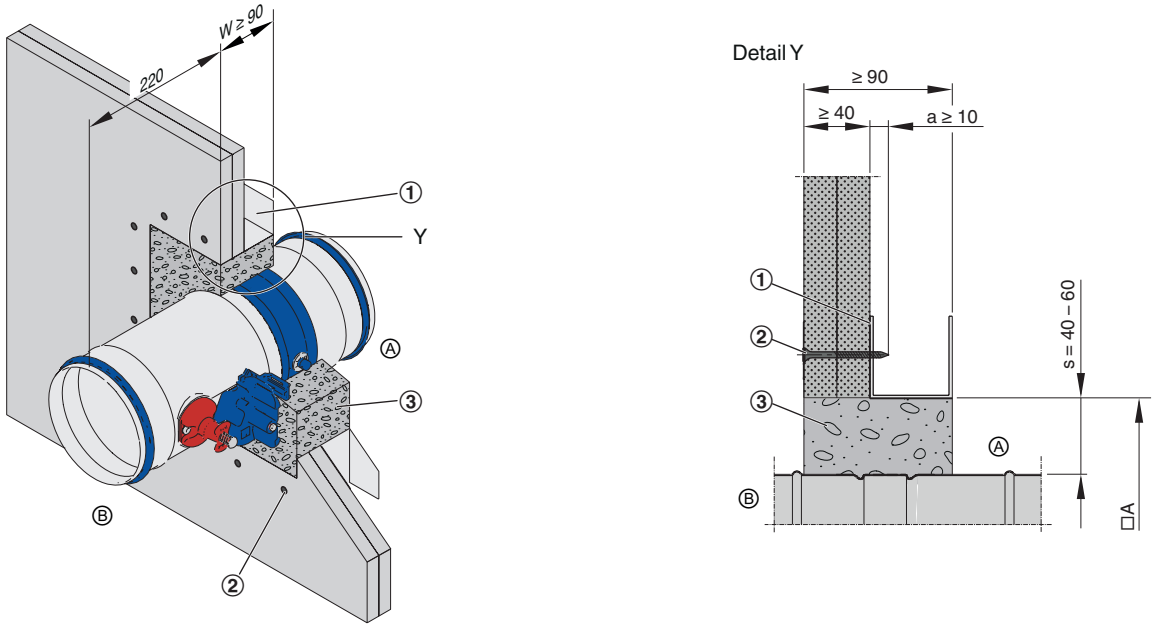

Fig. 29: Mortar-based installation

① Perimeter metal section
② Dry wall screw
③ Mortar
Ⓐ Installation side
Ⓑ Operating side

Personnel:

- Specialist personnel

Materials:

- Mortar *'Acceptable mortars for mortar-based installation' on page 14*

Requirements

- Performance class EI 90 S
- Shaft walls with metal support structure and cladding on one side, W ≥ 90 mm; detailed specification *on page 42*
- ≥ 75 mm distance to load-bearing structural elements
- 200 mm minimum distance between two fire dampers
- Duct connection with flexible connector (recommended)

1. Erect the lightweight partition wall according to the manufacturer's instructions and create an installation opening *on page 42*.
2. Push the fire damper into the installation opening and secure it. Make sure that the distance from the connecting spigot on the operating side to the wall is 220 mm.

   If the wall thickness is >115 mm, extend the fire damper on the installation side with an extension piece or a spiral duct.
3. Close off the perimeter gap »s« with mortar.

5.8.2 Dry mortarless installation with square installation block EQ

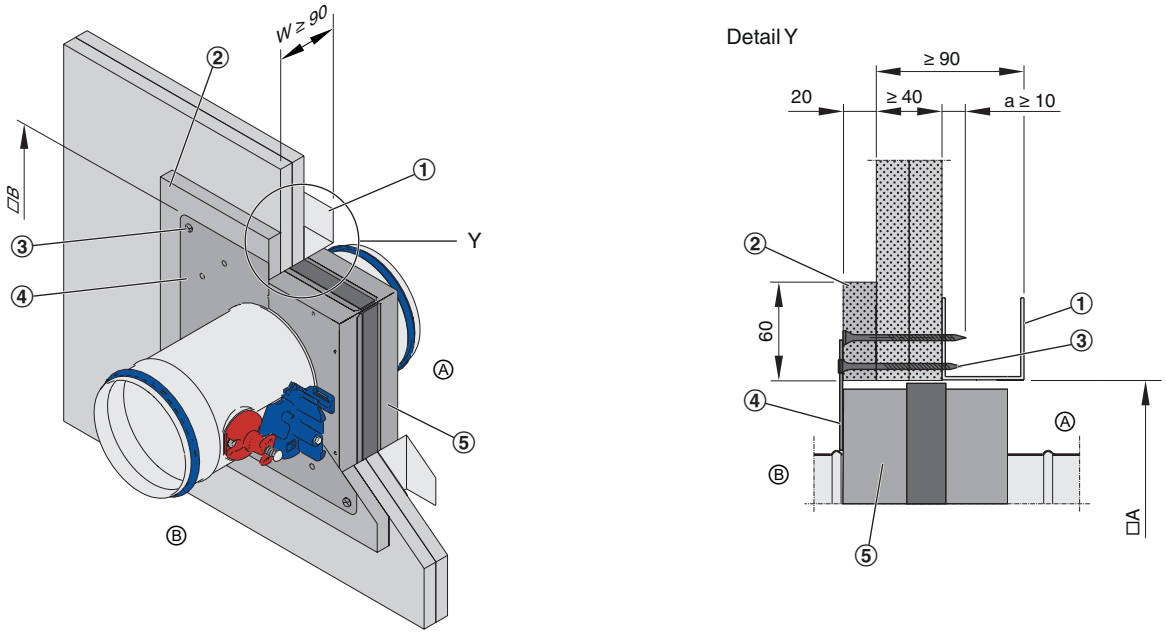

Fig. 30: Dry mortarless installation with square installation block EQ

① Perimeter metal section
② Reinforcing board
③ Dry wall screw
④ Cover plate
⑤ Installation kit EQ

Ⓐ Installation side
Ⓑ Operating side
□A Installation opening ↳ *43*
□B Cover plate size ↳ *43*

Personnel:

- Specialist personnel

Requirements

- Performance class EI 90 S
- Shaft walls with metal support structure and cladding on one side, W ≥ 90 mm; detailed specification ↳ *on page 42*
- Additional reinforcing board near the fire damper, at least 20 mm thick
- ≥ 75 mm distance between installation block and load-bearing structural elements
- 200 mm minimum distance between two installation blocks
- Duct connection with flexible connector (recommended)

1. ▸ Erect the lightweight partition wall according to the manufacturer's instructions and create an installation opening ↳ *on page 42*.
2. ▸ Push the fire damper assembly up to the cover plate into the opening.

   If the wall thickness is >115 mm, extend the fire damper on the installation side with an extension piece or a spiral duct.
3. ▸ Fix the cover plate with at least four screws (dry wall screws ∅ ≥ 4.2 mm, a ≥ 10 mm) to the perimeter metal section.

5.9 Suspended installation of the fire damper

5.9.1 General

Fire dampers can be suspended from solid ceiling slabs using adequately sized threaded rods. Load the suspension system only with the weight of the fire damper.

Ducts must be suspended separately.

Suspension systems longer than 1.5 m require fire-resistant insulation.

For suspended installation, the fire damper requires an extension piece; alternatively, the fire damper can be connected to the ductwork before it is suspended.

Size of threaded rods

Thread	M8	M10	M12	M14	M16	M20
Fmax (N) per threaded rod	219	348	505	690	942	1470
Maximum loading [kg] per threaded rod	22	35	52	70	96	150

5.9.2 Fixing to the ceiling slab

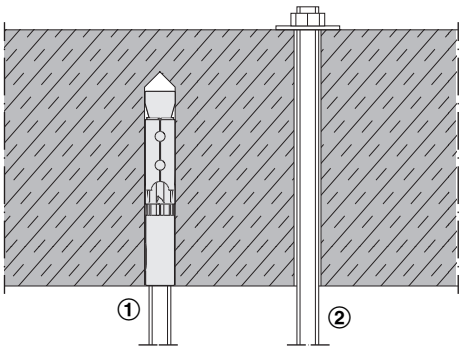

Fig. 31: Fixing to the ceiling slab

① Anchor with certified fire protection qualification
② Push through installation

Only steel anchors with certified fire protection qualification and suitable for the wall or ceiling must be used. Instead of anchors, threaded rods can be used and can be secured using nuts and washers.

5.9.3 Fire dampers with fire batt

5.9.3.1 Horizontal duct

Installation of the fire damper with a fire batt in horizontal ducts requires a suspension system on both sides of the wall.

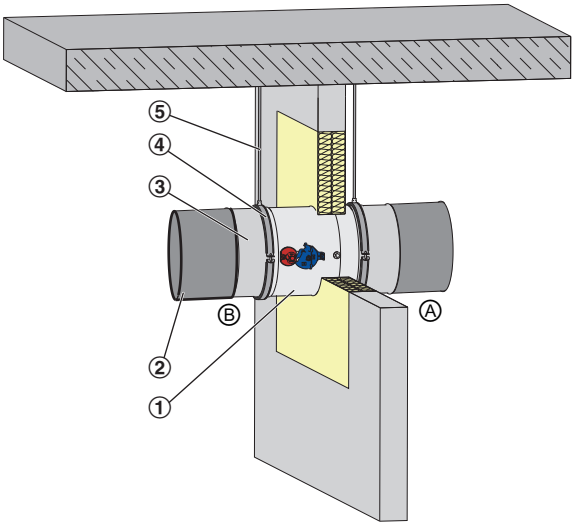

Fig. 32: Suspension system, horizontal duct

① Fire damper
② Flexible connector
③ Extension piece
④ Clamp
⑤ Threaded rod, at least M8, galvanised steel. Fixing to the ceiling slab ↳ *Chapter 5.9.2 'Fixing to the ceiling slab' on page 46* Suspension systems longer than 1.5 m require fire-resistant insulation.
Ⓐ Installation side
Ⓑ Operating side

Note: Each fire damper must be suspended separately.

5.9.3.2 Vertical duct

Suspended installation of the fire damper

Suspension below the ceiling slab with solid brackets and rivets. Fig. 33/1)

Fixing above and below the ceiling slab with rivets. Fig. 33/2)

Fixing above and below the ceiling slab with heavy duty clamp. Fig. 33/3)

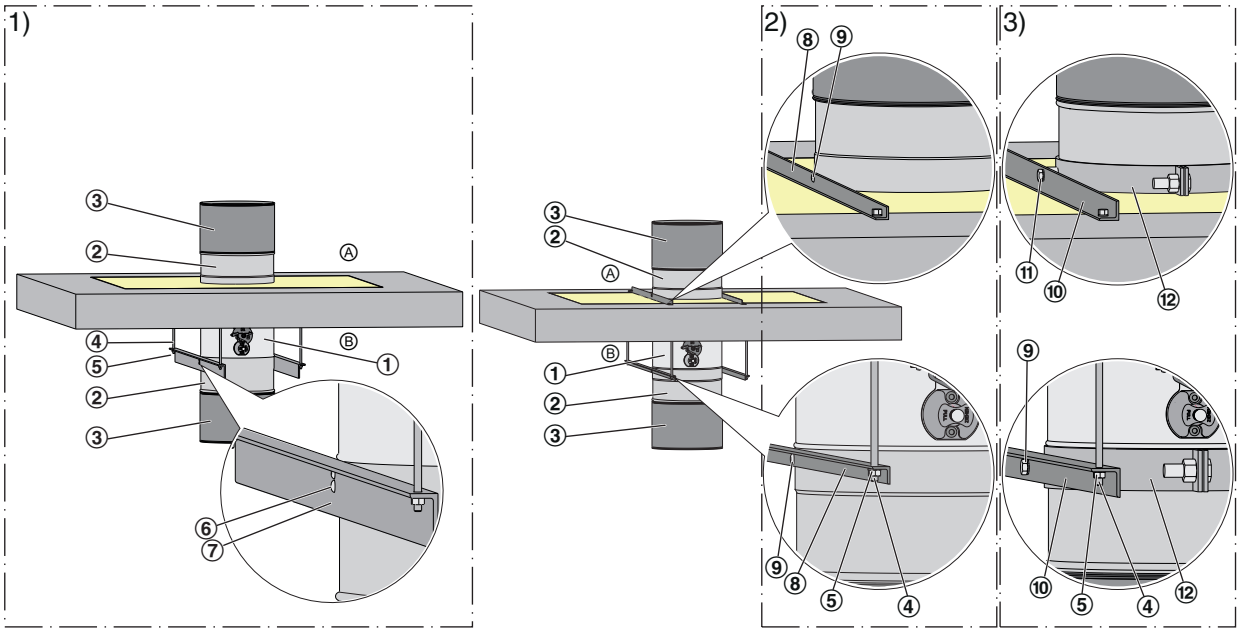

Fig. 33: Suspended installation variants for fire dampers

① Fire damper
② Extension piece
③ Flexible connector
④ Threaded rod, at least M8, galvanised steel
⑤ Washer and nut suitable for the threaded rod
⑥ 4 steel rivets ∅ 6.4 mm, clamping range 2 to 20 mm, e.g. cap blind rivets or high strength rivets. The riveted connection must be air-tight.
⑦ L-section to EN 10056-1 60 × 30 × 5 mm
⑧ Angle section 20 × 20 × 3 mm to EN 10056-1
⑨ 4 steel rivets ∅ 6.4 mm clamping range 2 to 20 mm, e.g. cap blind rivets or high strength rivets; the riveted connection must be air-tight.
⑩ Angle section 35 × 35 × 4 mm to EN 10056-1
⑪ Screw fixing suitable for the clamp
⑫ Clamp, e.g. Hilti MP-MX, Valraven BIS HD 500, or equivalent
Ⓐ Installation side
Ⓑ Operating side

Upright installation of the fire damper

Fixing above and below the ceiling slab with rivets. Fig. 34/1)

Fixing above and below the ceiling slab with heavy duty clamp. Fig. 34/2)

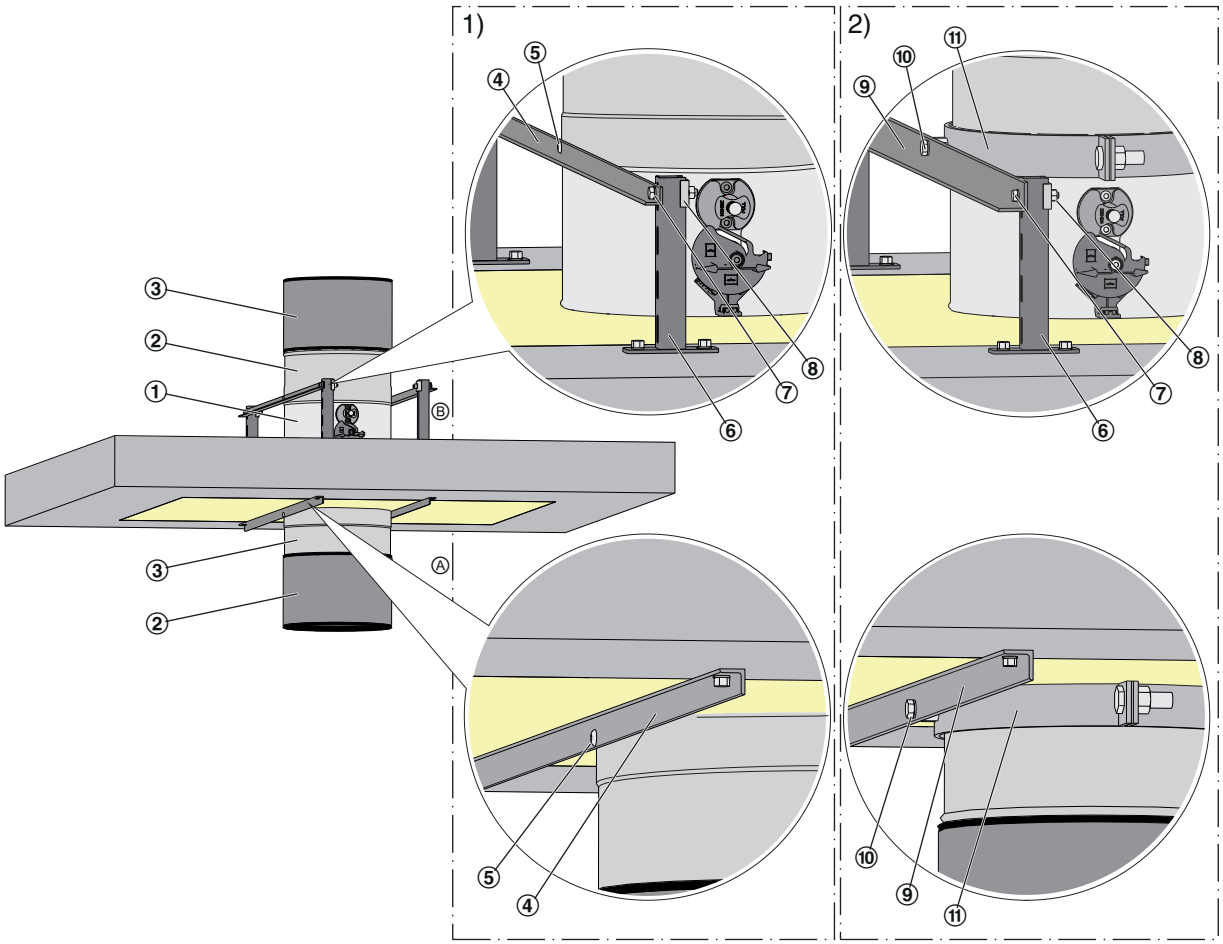

Fig. 34: Upright installation variants for fire dampers

① Fire damper
② Extension piece
③ Flexible connector
④ Angle section 20 × 20 × 3 mm to EN 10056-1
⑤ 4 steel rivets ∅ 6.4 mm, clamping range 2 to 20 mm, e.g. cap blind rivets or high strength rivets; the riveted connection must be air-tight.
⑥ Bracket, e.g. Hilti MM-B-30 or equivalent
⑦ 4 screw fixings (M8 screw with 2 washers and nut), suitable for the bracket
⑧ Fixing bracket, Varifix or Müpro MPC or equivalent
⑨ Angle section 35 × 35 × 4 mm to EN 10056-1
⑩ Screw fixing suitable for the clamp
⑪ Clamp, e.g. Hilti MP-MX, Valraven BIS HD 500, or equivalent
Ⓐ Installation side
Ⓑ Operating side

6 Connecting the ductwork

6.1 Ducts

Ducts of combustible or non-combustible materials may be connected to fire dampers.

6.2 Removing the transport/installation protection

Fire dampers with nominal size 315 and above and without installation block are shipped with a transport/installation protection. In case of mortar-based installation this protection must not be removed until the mortar has hardened. To remove the transport/installation protection, pull it out of the fire damper on the operating side.

6.3 Limiting duct expansion

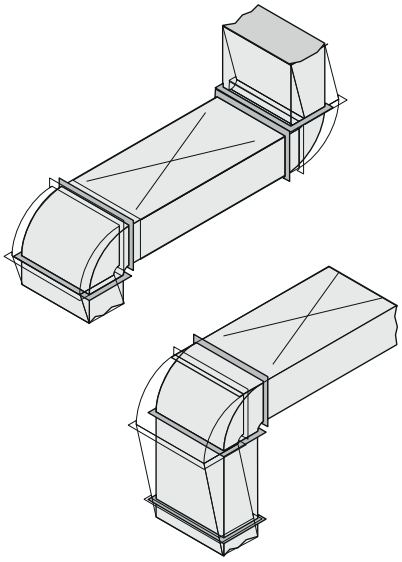

Fig. 35: Limiting loads

Ducting must be installed in such a manner that it does not impose any significant loads on the fire damper in the event of a fire.

The expansion of ducts in the event of a fire can be compensated by brackets and turns, Fig. 35.

> **Note**
> *For further information please refer to the guideline regarding fire protection requirements on ventilation systems (Lüftungsanlagen-Richtlinie, LüAR).*

As ducts may expand and walls may become deformed in the event of a fire, we recommend for the following applications using flexible connectors when connecting the fire damper to rigid ducts:

- in lightweight partition walls
- in lightweight shaft walls
- with fire batt

6.3.1 Flexible connectors

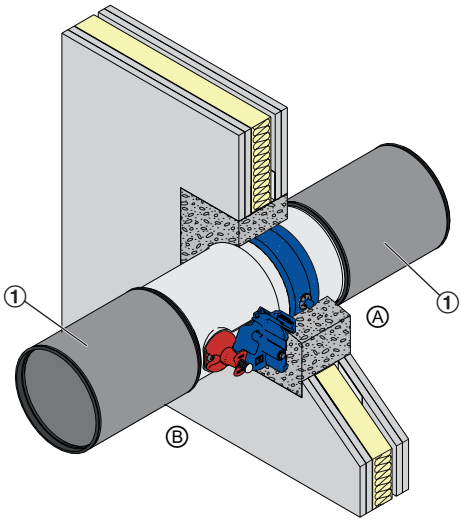

Fig. 36: Fire damper with flexible connector

① Flexible connector
Ⓐ Installation side
Ⓑ Operating side

The flexible connectors should be installed in such a way that they can compensate both tension and compression. Flexible ducts can be used as an alternative. If flexible connectors are used, equipotential bonding must be ensured *Chapter 7.3 'Equipotential bonding' on page 51*.

> **Note**
> *To ensure that the open fire damper blade is contained within the fire damper casing on the installation side, an extension piece is required for nominal size 224 and above.*

6.4 Cover grille

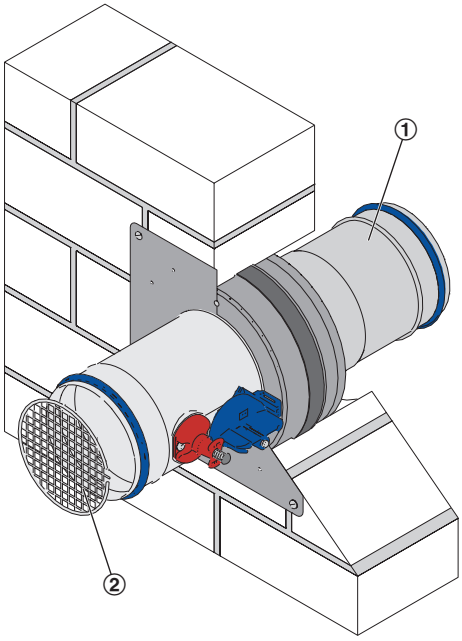

Fig. 37: Fire damper with cover grille

① Extension piece required from nominal size 224
② Cover grille

If only one end is to be ducted on site, the other end must have a cover grille.

> **Note**
>
> *To ensure that the open fire damper blade is contained within the fire damper casing on the installation side, an extension piece is required for nominal size 224 and above.*

6.5 Inspection access

Type FKRS-EU fire dampers have an inspection access that is closed with a rubber stopper ↳ *Chapter 4 'Parts and function' on page 12*. The interior of the fire damper must remain accessible for maintenance work and cleaning. Depending on the installation configuration it may be necessary to provide inspection panels in the connecting ducts.

7 Making electrical connections

General safety notes

> ⚠ **DANGER!**
>
> Danger of electric shock! Do not touch any live components! Electrical equipment carries a dangerous electrical voltage.
>
> – Only skilled qualified electricians are allowed to work on the electrical system.
> – Switch off the power supply before working on any electrical equipment.

7.1 Connecting the limit switches (fire dampers with fusible link)

Personnel:

- Skilled qualified electrician

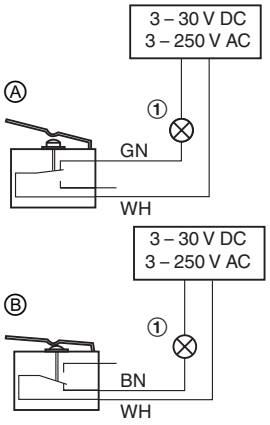

Fig. 38: Wiring example for limit switch

① Indicator light or relay, to be provided by others

- The limit switches must be connected according to the wiring example Fig. 38
- Indicator lights or relays can be connected as long as the performance specifications are taken into consideration.

Type of connection	Limit switches	Damper blade	Electric circuit
Ⓐ NC contact	not actuated	CLOSED or OPEN position is not reached	closed
Ⓑ NO contact	actuated	CLOSED or OPEN position is reached	closed

7.2 Connecting the spring return actuator

Personnel:

- Skilled qualified electrician

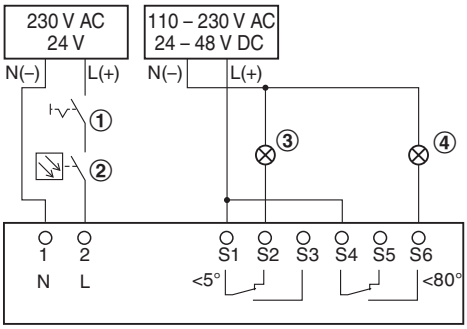

Fig. 39: Actuator connection, example

① Switch for opening and closing, to be provided by others
② Optional release mechanism, e.g. TROX smoke detector Type RM-O-3-D or RM-O-VS-D
③ Indicator light for CLOSED position, to be provided by others
④ Indicator light for OPEN position, to be provided by others

- The fire damper may be equipped with a spring return actuator for a supply voltage 230 V AC or 24 V AC/DC. Observe the performance data on the rating plate.
- The spring return actuator must be connected according to the wiring example shown. Several actuators can be connected in parallel as long as the performance specifications are taken into consideration.

Actuators with 24 V AC/DC

Safety transformers must be used. The connecting cables are fitted with plugs. This ensures quick and easy connection to the TROX AS-i bus system. For connection to the terminals, shorten the connecting cable.

7.3 Equipotential bonding

If equipotential bonding is a requirement, there must be an electrical earth connection from the fire damper to the duct. In the event of a fire, mechanical loads from the equipotential bonding must not affect the fire damper.

8 Functional test

General

During operation at normal temperatures, the damper blade is open. A functional test involves closing the damper blade and opening it again.

8.1 Fire damper with fusible link

Closing the damper blade

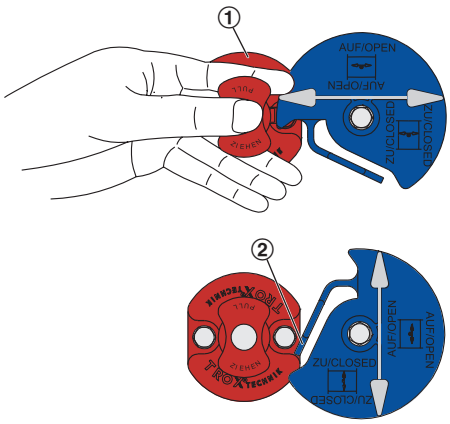

Fig. 40: Closing the damper blade

> **CAUTION!**
> Danger of injury when reaching into the fire damper while the damper blade is moving. Do not reach into the fire damper while actuating the release mechanism.

Requirement

- The damper blade is OPEN

1. Grasp the release mechanism ① as shown with the thumb and middle fingers.
2. Pull the release mechanism towards you with both fingers.
   ⇨ The damper blade closes and the tab ② on the handle locks into the CLOSED position.

Opening the damper blade

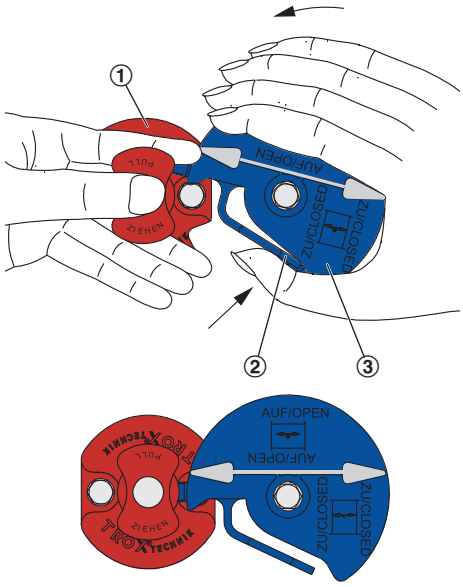

Fig. 41: Opening the damper blade

Requirement

- The damper blade is CLOSED

1. With your left hand, pull the release mechanism ① towards you and hold it.
2. With your right hand, grasp the handle ③ as shown and press down the tab ② with your thumb.
3. Then turn the handle anti-clockwise to the travel stop.
4. Release the mechanism.
   ⇨ The handle locks into the OPEN position.

Damper blade position indicator

The position of the damper blade is indicated by the position of the handle.

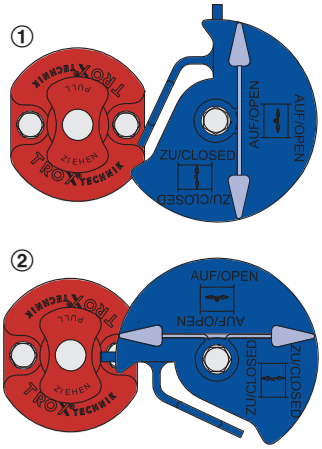

Fig. 42: Damper blade position indicator

① Damper blade closed
② Damper blade open

8.2 Fire damper with spring return actuator

Status indicator

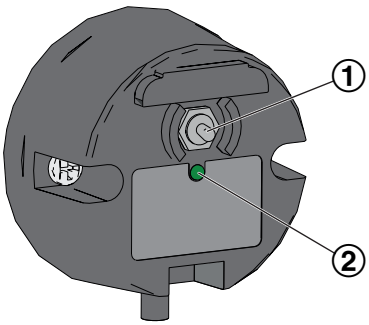

Fig. 43: Thermoelectric release mechanism

① Toggle switch for functional test
② Indicator light

The indicator light ② for the thermoelectric release mechanism is illuminated when all of the following conditions apply:

- Power is supplied.
- The thermoelectric release is in order.
- The toggle switch is not being pushed.

Closing/opening the damper blade with spring return actuator

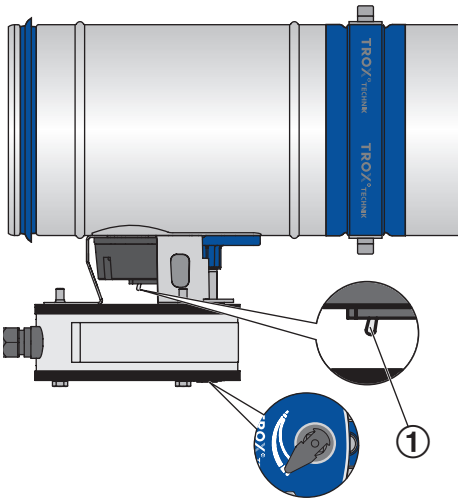

Fig. 44: Functional test

CAUTION!

Danger of injury when reaching into the fire damper while the damper blade is moving. Do not reach into the fire damper while actuating the release mechanism.

Requirement

- Power is supplied

1. ▸ Push toggle switch ① and hold it.
   ⇨ This interrupts the power supply, and the damper blade closes.
2. ▸ Check if the damper blade is CLOSED, check running time.
3. ▸ Release the toggle switch ①.
   ⇨ Voltage is supplied again, and the damper blade opens.
4. ▸ Check if the damper blade is OPEN, check running time.

Damper blade position indicator

The position of the damper is indicated by the pointer on the actuator.

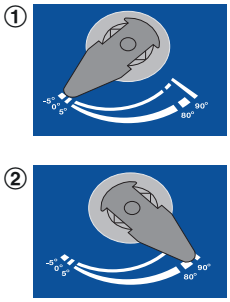

Fig. 45: Damper blade position indicator

① Damper blade is closed
② Damper blade is open

Functional test with automatic control unit

The function of fire dampers with a spring return actuator can also be tested with an automatic control unit. The control unit should have the following functions:

- Opening and closing fire dampers in regular intervals (intervals to be set by the owner or operator)
- Monitoring of the actuator running times
- Issuing an alarm when the running times are exceeded and when fire dampers close
- Recording the test results

TROXNETCOM systems such as TNC-EASYCONTROL or AS-interface meet all these requirements. For details on these products please refer to the TROX Fire and Smoke Protection catalogue.

Opening the damper blade using the crank handle

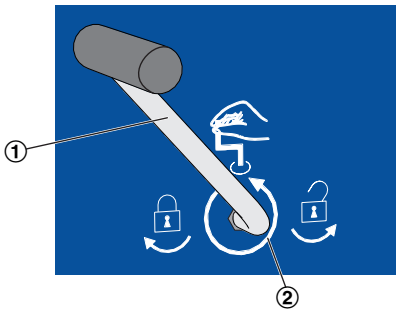

Fig. 46: Functional test

DANGER!

Danger due to malfunction of the fire damper.

If the damper blade has been opened by means of the crank handle (without power supply), it will no longer be triggered by a temperature increase, i.e. in the event of a fire. In other words, the damper blade will not close.

To re-establish its function, connect the power supply.

Requirement

- The damper blade is CLOSED

1. Insert the crank handle ① into the opening for the spring-winding mechanism. (The crank handle is clip-fixed to the connecting cable.)
2. Turn the crank handle into the direction of the arrow ② to just short of the travel stop.
3. Then quickly rotate the crank handle by approx. 90° towards the 'lock' position 🔒.

   ⇨ The damper blade remains in the OPEN position.
4. Remove the crank handle.

Closing the damper blade using the crank handle

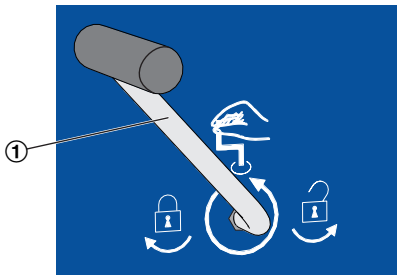

Fig. 47: Functional test

CAUTION!

Danger of injury when reaching into the fire damper while the damper blade is moving. Do not reach into the fire damper while actuating the release mechanism.

Requirement

- The damper blade is OPEN

1. Insert the crank handle ① into the opening for the spring-winding mechanism. (The crank handle is clip-fixed to the connecting cable.)
2. Rotate the crank handle by approx. 90° towards the 'unlock' position until a click can be heard.

   ⇨ The damper blade closes.
3. Remove the crank handle.

9 Commissioning

Before commissioning

Before commissioning, each fire damper must be inspected to determine and assess its actual condition. The inspection measures to be taken are listed in the table on ↳ *on page 59*.

Operation

During normal operation the damper blade is open to enable air passage through the ventilation system.

If the temperature in the duct or the ambient temperature rises in the event of a fire (≥ 72°/≥ 95°), the thermal release mechanism is triggered and closes the damper blade.

CLOSED fire dampers

Fire dampers which close while the ventilation and air conditioning system is running must be inspected before they are opened again in order to ensure their correct function ↳ *'Inspection' on page 57.*

10 Maintenance

10.1 General

General safety notes

DANGER!

Danger of electric shock! Do not touch any live components! Electrical equipment carries a dangerous electrical voltage.

- Only skilled qualified electricians are allowed to work on the electrical system.
- Switch off the power supply before working on any electrical equipment.

CAUTION!

Danger due to inadvertently actuating the fire damper. Inadvertent actuation of the damper blade or other parts can lead to injuries.

Make sure that the damper blade cannot be released inadvertently.

Regular care and maintenance ensure operational readiness, functional reliability, and long service life of the fire damper.

The owner or operator of the system is responsible for the maintenance of the fire damper. The operator is responsible for creating a maintenance plan, for defining the maintenance objectives, and for the functional reliability of the fire damper.

Functional test

The functional reliability of the fire damper must be tested at least every six months; this has to be arranged by the owner or operator. If two consecutive tests, one 6 months after the other, are successful, the next test can be conducted one year later.

The functional test must be carried out in compliance with the basic maintenance principles of the following standards:

- EN 13306
- DIN 31051
- EN 15423

The function of fire dampers with a spring return actuator can also be tested with an automatic control unit *'Functional test with automatic control unit' on page 54*.

Maintenance

The fire damper and the spring return actuator are maintenance-free with regard to wear but fire dampers must still be included in the regular cleaning of the ventilation system.

Cleaning

The fire damper may be cleaned with a dry or damp cloth. Sticky dirt or contamination may be removed with a commercial, non-aggressive cleaning agent. Do not use abrasive cleaners or tools (e.g. brushes).

Inspection

The fire damper must be inspected before commissioning. After commissioning, the function has to be tested in regular intervals. Local requirements and building regulations must be complied with. The inspection measures to be taken are listed under *on page 59*. The test of each fire damper must be documented and evaluated. If the requirements are not fully met, suitable remedial action must be taken.

Repair

For safety reasons, repair work must only be carried out by expert qualified personnel or the manufacturer. Only original replacement parts are to be used. A functional test *52* is required after any repair work.

10.2 Lubricating points

Lubricating points

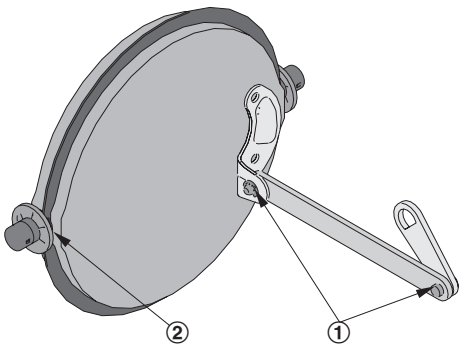

Fig. 48: Lubricating points

① Push rod bearings
② Damper blade bearings (both sides)

Only lubricate the lubricating points if the damper blade cannot be opened or closed easily. Use only oil or grease that is free of resins or acids.

10.3 Replacing the fusible link

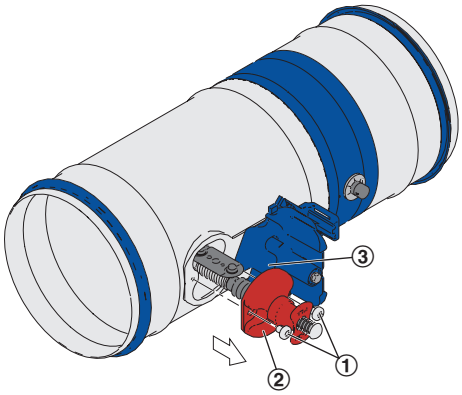

Fig. 49: Removing the fusible link holder

1. Close the damper blade.
2. Release screws ① on the fusible link holder ②.
3. Remove fusible link holder ② from the fire damper. While doing so, slightly press down the tab ③ of the handle.

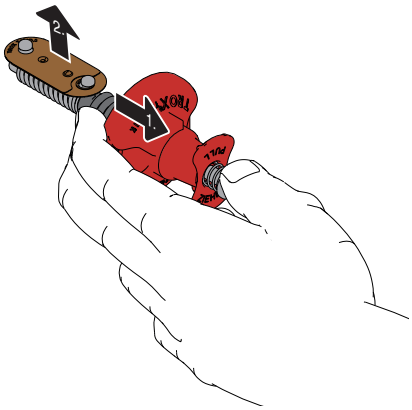

Fig. 50: Removing the fusible link holder

4. Grasp the fusible link holder as shown. Move your middle fingers into the direction of the arrow.
5. Remove the used fusible link.
6. Insert the new fusible link.
7. Put the fusible link holder back into the fire damper and fix it with screws ①.
8. Carry out functional test.

10.4 Inspection, maintenance and repair measures

Interval	Maintenance work	Personnel
A	Accessibility of the fire damper ▪ Internal and external accessibility – Provide access.	Specialist personnel
	Installation of the fire damper ▪ Installation into walls/ceiling slabs according to this manual ☞ *14* – Install the fire damper correctly.	Specialist personnel
	Transport and installation protection, if any ▪ Transport/installation protection has been removed – Remove transport/installation protection	Specialist personnel
	Connection of ductwork/cover grille/flexible connector ☞ *49* ▪ Connection according to this manual – Establish correct connection	Specialist personnel
	Power supply to the spring return actuator ▪ Power supply according to spring return actuator rating plate – Provide correct power supply	Skilled qualified electrician
A / B	Check fire damper for damage ▪ Fire damper, damper blade and seal must be intact – Replace the damper blade – Repair or replace the fire damper.	Specialist personnel
	Function of the release mechanism ▪ Function OK ▪ Fusible link intact/no corrosion – Replace the fusible link – Replace the release mechanism	Specialist personnel
	Functional test of the fire damper (with fusible link) ☞ *52* ▪ Fire damper can be opened manually ▪ Handle can be locked in the OPEN position ▪ Damper blade closes independently when triggered manually – Determine and eliminate the cause of the fault – Repair or replace the fire damper – Replace the release mechanism	Specialist personnel
	Functional test of the fire damper (with spring return actuator) ☞ *52* ▪ Function OK ▪ Damper blade closes ▪ Damper blade opens – Determine and eliminate the cause of the fault – Replace the spring return actuator – Repair or replace the fire damper	Specialist personnel

Interval	Maintenance work	Personnel
	Function of external smoke detector ▪ Function OK ▪ Fire damper closes when triggered manually or when smoke is detected ▪ Fire damper opens after reset – Determine and eliminate the cause of the fault – Repair or replace smoke detector	Specialist personnel
C	Cleaning the fire damper ▪ No contamination in the interior or on the exterior of the fire damper ▪ No corrosion – Remove contamination with a damp cloth – Remove corrosion or replace part	Specialist personnel

Interval

A = Commission

B = Regularly

The functional reliability of fire dampers must be tested at least every six months. If two consecutive tests are successful, the next test can be conducted one year later.

C = As required, depending on the degree of contamination

Maintenance work

Item to be checked

- Required condition
  - Remedial action if necessary

11 Decommissioning, removal and disposal

Final decommissioning

- Switch off the ventilation system.
- Switch off the power supply.

Removal

DANGER!

Danger of electric shock! Do not touch any live components! Electrical equipment carries a dangerous electrical voltage.

– Only skilled qualified electricians are allowed to work on the electrical system.
– Switch off the power supply before working on any electrical equipment.

1. Disconnect the wiring.
2. Remove the ducts.
3. Close the damper blade.
4. Remove the fire damper.

Disposal

For disposal, the fire damper must be disassembled.

ENVIRONMENT!

Dispose of electronic components according to the local electronic waste regulations.