Separation Technology

Deaeration Systems & Separation Technology

Exdirt

The core element is a tube mesh construction that has proven itself over the decades, with an extremely low rate of pressure loss in the fl ow direction and a high rate of pressure loss in the transverse direction. This drastically reduces the amount of turbulence and guides the sludge particles to a part-stabilized area

Volumetric flow:
1.25 - 8 m³/h

Exiso thermal insulation:
DN 20 - DN 40 and 2”

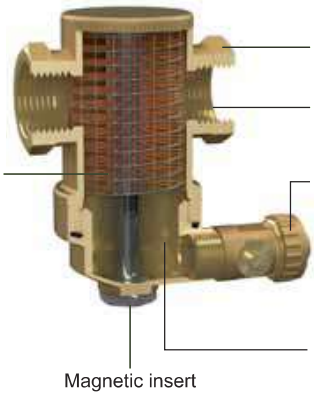

Several connections are available from A22 to 2”

Through flow is not impeded by sludge

Space-saving, perpendicular draining tap. The collected sludge is quickly and forcefully pressed out when the tap is opened so that it can be closed again right away. The entire process takes just a few seconds

The capacity to capture large amounts of sludge results in longer intervals before cleaning becomes necessary

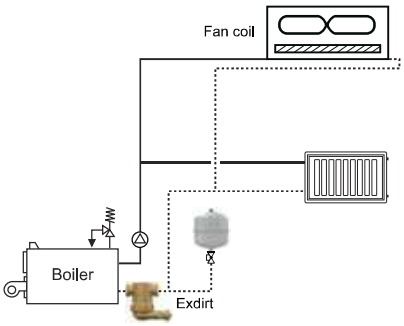

Exdirt “brass” system dirt and sludge seperation sketch

Exdirt (Brass) Dirt and Sludge Separator

Brass, 110°C 10 bar

- Horizontal

Type	Article No	Weight kg	Connection	V̇max m³/h	L mm	Ø mm	H mm
D 22	9252000	1.0	22 mm[1)]	1.25	85	63	103[2)]
D 3/4	9252010	0.9	Rp 3/4	1.25	85	63	103[2)]
D 1	9252020	1.0	Rp 1	2.00	88	63	120[2)]
D 1 1/4	9252030	1.2	Rp 1 1/4	3.70	88	63	140[2)]
D 1 1/2	9252040	1.3	Rp 1 1/2	5.00	88	63	174[2)]
D 2	9252050	3.1	Rp 2	8.00	132	100	215

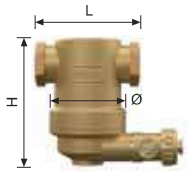

Material Group : 82

Brass, 110°C 10 bar

- Vertical

Type	Article No	Weight kg	Connection	V̇max m³/h	L mm	Ø mm	H mm
D 22 V	9252500	1.5	22 mm[1)]	1.25	84	63	144[2)]
D 3/4 V	9252510	1.4	Rp 3/4	1.25	84	63	144[2)]
D 1 V	9252520	1.5	Rp 1	1.25	84	63	144[2)]

Material Group : 82

Exdirt (Brass) Dirt and Sludge Separator - with magnetic insert

Brass, 110°C 10 bar

- Horizontal M with magnetic insert

Type	Article No	Weight kg	Connection	V̇max m³/h	L mm	Ø mm	H mm
D 22 M	9256000	1.1	22 mm[1)]	1.25	85	63	103[2)]
D 3/4 M	9256010	1.0	Rp 3/4	1.25	85	63	103[2)]
D 1 M	9256020	1.1	Rp 1	2.00	88	63	120[2)]
D 1 1/4 M	9256030	1.3	Rp 1 1/4	3.70	88	63	140[2)]
D 1 1/2 M	9256040	1.4	Rp 1 1/2	5.00	88	63	174[2)]
D 2 M	9256050	3.3	Rp 2	8.00	132	100	215

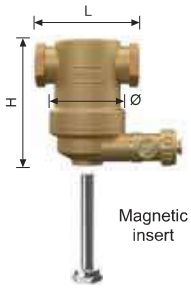

Material Group : 82

Brass, 110°C 10 bar

- Vertical M with magnetic insert

Type	Article No	Weight kg	Connection	V̇max m³/h	L mm	Ø mm	H mm
D 22 V-M	9256500	1.6	22 mm[1)]	1.25	84	63	144[2)]
D 3/4 V-M	9256510	1.5	Rp 3/4	1.25	84	63	144[2)]
D 1 V-M	9256520	1.6	Rp 1	1.25	84	63	144[2)]

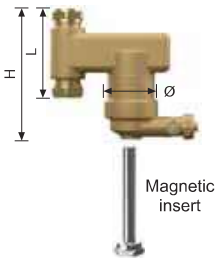

Material Group : 82

[1)] Clamping ring
[2)] Thermal insulation available

Exdirt

The sludge/dirt separation in the Reflex Exdirt works on a similar principle to micro-bubble separation: The flow is guided through an area with a greater cross-section than the connection dimensions in order to reduce the flow speed. The ensuing turbulence caused by the tube mesh causes heavy materials to move in an undetermined direction. Depending on the volume flow, density, and volume, parts of these sludge particles are supported in their natural breakaway motion and guided to the bottom section of the casing

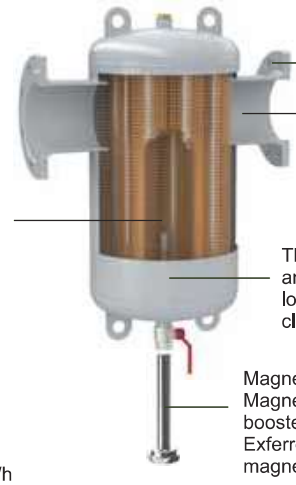

Several connections are available from DN 50 - DN 600

Through flow is not impeded by sludge

The capacity to capture large amounts of sludge results in longer intervals before cleaning becomes necessary

Magnetic insert: Magnetic removal can be boosted by insertion of Exferro high performance magnets

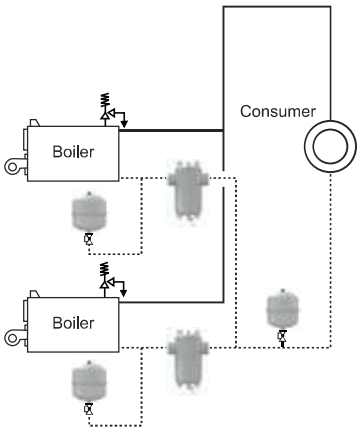

Exdirt "steel" system dirt and sludge seperation sketch

Overview

- Connection: DN 50 - DN 600
- Volumetric fl ow: 12.5 - 1530 m³/h
- Exiso thermal insulation: DN 50 - DN 150

Exdirt (Steel) Dirt and Sludge Separator

Steel, 110°C 10 bar

- Welded connection

Type	Article No	Weight kg	Connection	V̇max m³/h	L mm	Ø mm	H mm	HB mm
D 60.3	8252100	5	60.3	12.5	260	132	502[1)]	370
D 76.1	8252110	5	76.1	20.0	260	132	502[1)]	370
D 88.9	8252120	11	88.9	27.0	370	206	617[1)]	430
D 114.3	8252130	11	114.3	47.0	370	206	617[1)]	430
D 139.7	8252140	24	139.7	72.0	525	354	792[1)]	550
D 168.3	8252150	26	168.3	108.0	525	354	792[1)]	550
D 219.1	8252160	90	219.1	180.0	650	409	1002	600
D 273.0	8252170	108	273.0	288.0	750	480	1266	800
D 323.9	8252180	150	323.9	405.0	850	634	1476	900

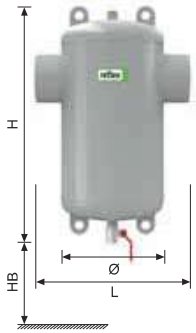

Material Group : 83

[1)] Thermal insulation available

Steel, 110°C 10 bar

- Flange connection

Type	Article No	Weight kg	Connection	V̇max m³/h	L mm	Ø mm	H mm	HB mm
D 50	8252300	11	DN 50/PN 16	12.5	350	132	502[1)]	370
D 65	8252310	12	DN 65/PN 16	20.0	350	132	502[1)]	370
D 80	8252320	18	DN 80/PN 16	27.0	470	206	617[1)]	430
D 100	8252330	21	DN 100/PN 16	47.0	470	206	617[1)]	430
D 125	8252340	60	DN 125/PN 16	72.0	635	354	792[1)]	550
D 150	8252350	64	DN 150/PN 16	108.0	635	354	792[1)]	550
D 200	8252360	110	DN 200/PN 16	180.0	775	409	1002	600
D 250	8252370	146	DN 250/PN 16	288.0	890	480	1266	800
D 300	8252380	194	DN 300/PN 16	405.0	1005	634	1476	900
D 350	8252910	Upon request	DN 350/PN 16	500.0	1128	634	1890	Upon request
D 400	8252920	Upon request	DN 400/PN 16	650.0	1226	750	2090	Upon request
D 450	8252940	Upon request	DN 450/PN 16	850.0	1330	750	2300	Upon request
D 500	8252950	Upon request	DN 500/PN 16	1060.0	1430	1000	2520	Upon request
D 600	8252960	Upon request	DN 600/PN 16	1530.0	1630	1200	2660	Upon request

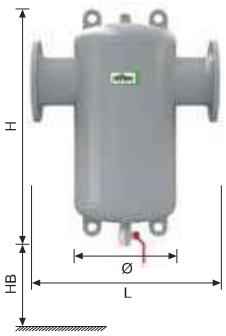

Material Group : 83

[1)] Thermal insulation available

Benefits in brief:

- Removes free circulating dirt and sludge particles < 5 micrometer
- Functions in fully automated continuous operation, produces just a minimal constant drop in pressure
- Maintenance takes just 5 seconds Permanent free throughflow opening for the water
- No shut-off valves or bypass lines required. Desludging possible during system operation
- Full range in terms of operating pressures and materials
- Continually ensures flawless functionality of heat generators, thermostat valves, etc.
- Reduces the risk of system defects and breakdowns in the long term

Exdirt R

The sludge/dirt separation in the Reflex Exdirt R works on a similar principle to micro-bubble separation: The flow is guided through an area with a greater cross-section than the connection dimensions in order to reduce the flow speed. The ensuing turbulence caused by the tube mesh causes heavy materials to move in an undetermined direction. Depending on the volume flow, density, and volume, parts of these sludge particles are supported in their natural breakaway motion and guided to the bottom section of the casing

Several connections are available from DN 50 - DN 600

Through flow is not impeded by sludge

The capacity to capture large amounts of sludge results in longer intervals before cleaning becomes necessary. Maintenance is much easier with its detachable base

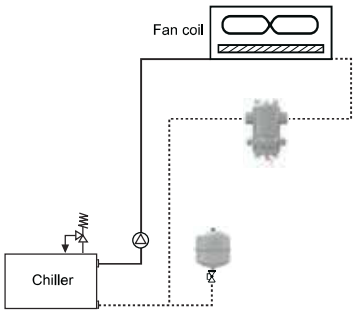

Exdirt "steel" system dirt and sludge seperation sketch

Overview

- Connection: DN 50 - DN 600
- Volumetric flow: 12.5 - 1530 m³/h

Exdirt (Steel) Dirt and Sludge Separator - with inspection flange

Steel, 110°C 10 bar

- Welded connection, inspection flange

Type	Article No	Weight kg	Connection	V̇max m³/h	L mm	Ø mm	H mm	HB mm
D 60.3 R	8252200	18	60,3	12,5	260	132	502[1)]	370
D 76.1 R	8252210	19	76,1	20,0	260	132	502[1)]	370
D 88.9 R	8252220	57	88,9	27,0	370	206	617[1)]	430
D 114.3 R	8252230	70	114,3	47,0	370	206	617[1)]	430
D 139.7 R	8252240	120	139,7	72,0	525	354	792[1)]	550
D 168.3 R	8252250	125	168,3	108,0	525	354	792[1)]	550
D 219.1 R	8252260	140	219,1	180,0	650	409	1002	600
D 273.0 R	8252270	196	273,0	288,0	750	480	1266	800
D 323.9 R	8252280	277	323,9	405,0	850	634	1476	900

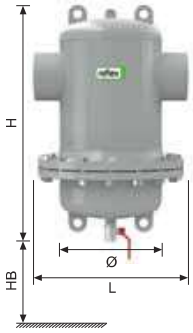

Material Group : 83

[1)] Thermal insulation available

Steel, 110°C 10 bar

- Flange connection, inspection flange

Type	Article No	Weight kg	Connection	V̇max m³/h	L mm	Ø mm	H mm	HB mm
D 50 R	8252400	20	DN 50/PN 16	12,5	350	132	502[1)]	370
D 65 R	8252410	21	DN 65/PN 16	20,0	350	132	502[1)]	370
D 80 R	8252420	68	DN 80/PN 16	27,0	470	206	617[1)]	430
D 100 R	8252430	76	DN 100/PN 16	47,0	475	206	617[1)]	430
D 125 R	8252440	120	DN 125/PN 16	72,0	635	354	792[1)]	550
D 150 R	8252450	140	DN 150/PN 16	108,0	635	354	792[1)]	550
D 200 R	8252460	181	DN 200/PN 16	180,0	775	409	1002	600
D 250 R	8252470	220	DN 250/PN 16	288,0	890	480	1266	800
D 300 R	8252480	305	DN 300/PN 16	405,0	1005	634	1476	900
D 350 R	8252912	Upon request	DN 350/PN 16	500.0	1128	634	1890	Upon request
D 400 R	8252922	Upon request	DN 400/PN 16	650.0	1226	750	2090	Upon request
D 450 R	8252942	Upon request	DN 450/PN 16	850.0	1330	750	2300	Upon request
D 500 R	8252952	Upon request	DN 500/PN 16	1060.0	1430	1000	2520	Upon request
D 600 R	8252962	Upon request	DN 600/PN 16	1530.0	1630	1200	2960	Upon request

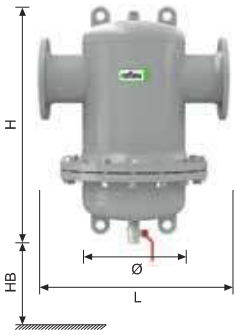

Material Group : 83

[1)] Thermal insulation available

Benefits in brief:

- Removes free circulating dirt and sludge particles < 5 micrometer
- Functions in fully automated continuous operation, produces just a minimal constant drop in pressure
- Maintenance takes just 5 seconds Permanent free throughflow opening for the water
- No shut-off valves or bypass lines required. Desludging possible during system operation
- Full range in terms of operating pressures and materials
- Continually ensures flawless functionality of heat generators, thermostat valves, etc.
- Reduces the risk of system defects and breakdowns in the long term
- Easier maintenance due to detachable base

Exdirt HC

The sludge/dirt separation in the Reflex Exdirt HC works on a similar principle to micro-bubble separation: The flow is guided through an area with a greater cross-section than the connection dimensions in order to reduce the flow speed. The ensuing turbulence caused by the tube mesh causes heavy materials to move in an undetermined direction. Depending on the volume flow, density, and volume, parts of these sludge particles are supported in their natural breakaway motion and guided to the bottom section of the casing. Specially designed for bigger systems with longer heights and higher volumetric flow.

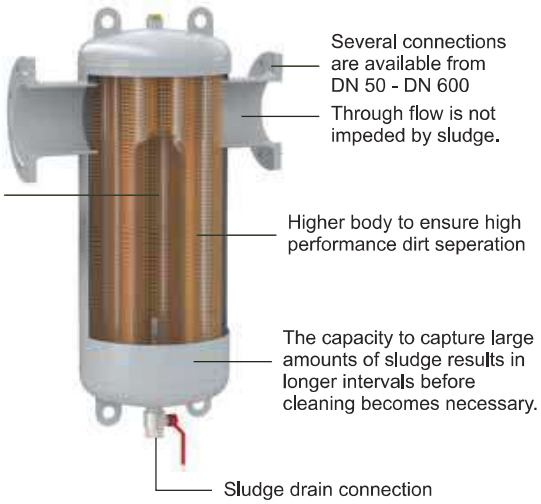

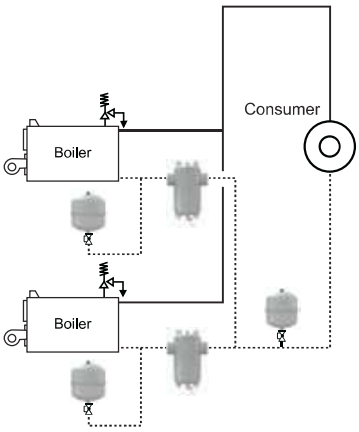

Exdirt "steel" HiCap system dirt and sludge seperation sketch

Overview
- Connection: DN 50 - DN 600
- Volumetric flow: 25 - 3000 m³/h

Exdirt HiCap (Steel) Dirt and Sludge Separator

Steel, 110°C 10 bar
- Welded connection

Type	Article No	Weight kg	Connection	V̇max m³/h	L mm	Ø mm	H mm	HB mm
D 60.3 HC	8252105	5	60.3	25.0	260	132	710	370
D 76.1 HC	8252115	5	76.1	40.0	260	132	710	370
D 88.9 HC	8252125	11	88.9	54.0	370	206	865	430
D 114.3 HC	8252135	11	114.3	94.0	370	206	865	430
D 139.7 HC	8252145	24	139.7	144.0	525	354	1125	550
D 168.3 HC	8252155	26	168.3	215.0	525	354	1125	550
D 219.1 HC	8252165	90	219.1	360.0	650	409	1395	600
D 273.0 HC	8252175	108	273.0	575.0	750	480	1509	800
D 323.9 HC	8252185	150	323.9	810.0	850	634	2125	900

Material Group : 83

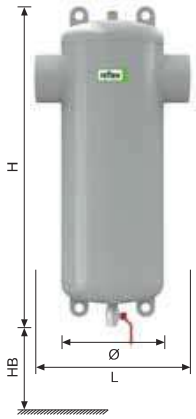

Steel, 110°C 10 bar
- Flange connection

Type	Article No	Weight kg	Connection	V̇max m³/h	L mm	Ø mm	H mm	HB mm
D 50 HC	8252305	11	DN 50/PN 16	25.0	350	132	710[1)]	370
D 65 HC	8252315	12	DN 65/PN 16	40.0	350	132	710[1)]	370
D 80 HC	8252325	18	DN 80/PN 16	54.0	470	206	865[1)]	430
D 100 HC	8252335	21	DN 100/PN 16	94.0	470	206	865[1)]	430
D 125 HC	8252345	60	DN 125/PN 16	144.0	635	354	1125[1)]	550
D 150 HC	8252355	64	DN 150/PN 16	215.0	635	354	1125[1)]	550
D 200 HC	8252365	110	DN 200/PN 16	360.0	775	409	1395	600
D 250 HC	8252375	146	DN 250/PN 16	575.0	890	480	1509	800
D 300 HC	8252385	194	DN 300/PN 16	810.0	1005	634	2125	900
D 350 HC	8252915	273	DN 350/PN 16	1000.0	1128	634	2400	Upon request
D 400 HC	8252925	354	DN 400/PN 16	1300.0	1226	750	2680	Upon request
D 450 HC	8252945	467	DN 450/PN 16	1700.0	1330	750	2970	Upon request
D 500 HC	8252955	701	DN 500/PN 16	2120.0	1430	1000	3100	Upon request
D 600 HC	8252965	913	DN 600/PN 16	3000.0	1630	1200	3250	Upon request

Material Group : 83

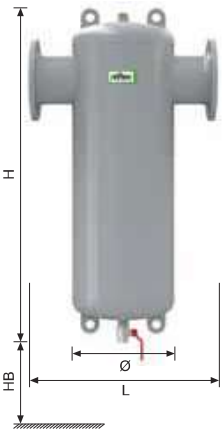

Exdirt R-HC

The sludge/dirt separation in the Reflex Exdirt R - HC works on a similar principle to micro-bubble separation: The flow is guided through an area with a greater cross-section than the connection dimensions in order to reduce the flow speed. The ensuing turbulence caused by the tube mesh causes heavy materials to move in an undetermined direction. Depending on the volume flow, density, and volume, parts of these sludge particles are supported in their natural breakaway motion and guided to the bottom section of the casing. Specially designed for bigger systems with longer heights and higher volumetric flow

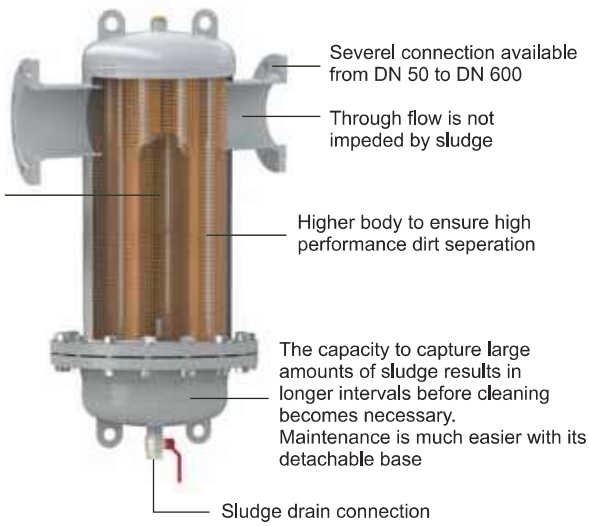

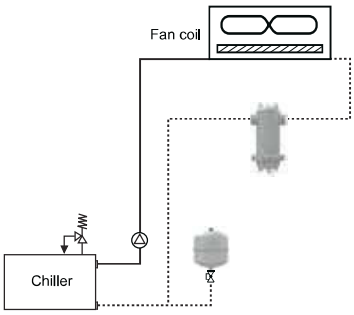

Exdirt "steel" HiCap system with inspection flange
dirt and sludge seperation sketch

Overview
- Connection: DN 50 - DN 600
- Volumetric flow: 25 - 3000 m³/h

Exdirt HiCap (Steel) Dirt and Sludge Separator - with inspection flange

Steel, 110°C 10 bar
- Welded connection, inspection flange

Type	Article No	Weight kg	Connection	V̇max m³/h	L mm	Ø mm	H mm	HB mm
D 60.3 R-HC	8252205	18	60.3	25.0	260	132	710	370
D 76.1 R-HC	8252215	19	76.1	40.0	260	132	710	370
D 88.9 R-HC	8252225	57	88.9	54.0	370	206	865	430
D 114.3 R-HC	8252235	70	114.3	94.0	370	206	865	430
D 139.7 R-HC	8252245	120	139.7	144.0	525	354	1125	550
D 168.3 R-HC	8252255	125	168.3	215.0	525	354	1125	550
D 219.1 R-HC	8252265	140	219.1	360.0	650	409	1395	600
D 273.0 R-HC	8252275	196	273.0	575.0	750	480	1509	800
D 323.9 R-HC	8252285	277	323.9	810.0	850	634	2125	900

Material Group : 83

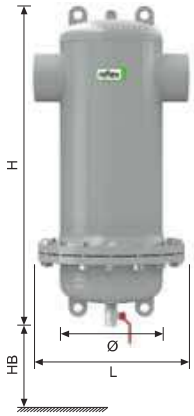

Steel, 110°C 10 bar
- Flange connection, inspection flange

Type	Article No	Weight kg	Connection	V̇max m³/h	L mm	Ø mm	H mm	HB mm
D 50 R-HC	8252405	20	DN 50/PN 16	25.0	350	132	710	370
D 65 R-HC	8252415	21	DN 65/PN 16	40.0	350	132	710	370
D 80 R-HC	8252425	68	DN 80/PN 16	54.0	470	206	865	430
D 100 R-HC	8252435	76	DN 100/PN 16	94.0	475	206	865	430
D 125 R-HC	8252445	120	DN 125/PN 16	144.0	635	354	1125	550
D 150 R-HC	8252455	140	DN 150/PN 16	215.0	635	354	1125	550
D 200 R-HC	8252465	181	DN 200/PN 16	360.0	775	409	1395	600
D 250 R-HC	8252475	220	DN 250/PN 16	575.0	890	480	1509	800
D 300 R-HC	8252485	305	DN 300/PN 16	810.0	1005	634	2125	900
D 350 R-HC	8252917	Upon request	DN 350/PN 16	1000.0	1128	634	2400	Upon request
D 400 R-HC	8252927	Upon request	DN 400/PN 16	1300.0	1226	750	2680	Upon request
D 450 R-HC	8252947	Upon request	DN 450/PN 16	1700.0	1330	750	2970	Upon request
D 500 R-HC	8252957	Upon request	DN 500/PN 16	2120.0	1430	1000	3100	Upon request
D 600 R-HC	8252967	Upon request	DN 600/PN 16	3000.0	1630	1200	3250	Upon request

Material Group : 83

Accessories

Exferro

- Solenoid insert for sludge separator
- 110°C/10 bar
- Magnetic bar screwed into thermowell/T-piece
- For uptake of ferromagnetic substances

Type	Article No	Area Of Application	Installation Length (mm)
DN 50/114.3	9258300	DN 50 - DN 100	300
D 125/219.1	9258310	DN 125 - DN 200	350
D 250/323.9	9258320	DN 250 - DN 300	400
D 350/600	9258330	> DN 100	500

Material Group : 83

Exiso

- Brass Exvoid, A 22-A 1 1/2 - 2"
- Brass Exdirt D 22-D 1 1/2 - 2"

Type	Article No	Material Group	Insulation thick-ness (mm)	Ø mm	H mm
A/D 22-1 1/2	9254811	82	15	125	215-275
A/D 2"	9254801	82	15	Upon request	

- Thermal insulation for Exvoid and Exdirt, steel version

Type	Article No	Material Group	Insulation thick-ness (mm)	Ø mm	H mm
50-76.1	9254831	83	30.5	228	447
80-114.1	9254841	83	30.5	290	567
125-168.3	9254851	83	30.5	395	742

Pressure Loss Chart

- Exvoid, Exdirt, Extwin

Connection	kvs, m^3/h	V max. m^3/h
Rp 3/4	10.7	1.25
Rp 1	17.2	2.00
Rp 1 1/4	31.8	3.70
Rp 1 1/2	40.0	5.00
Rp 2	56.1	7.50
DN 50	72.2	12.50
DN 65	121.7	20.00

Connection	kvs, m^3/h	V max. m^3/h
DN 80	158.5	27.0
DN 100	244.3	47.0
DN 125	351.3	72.0
DN 150	487.9	108.0
DN 200	780.6	180.0
DN 250	1185.7	288.0
DN 300	1696.4	405.0

Pressure loss calculation for all volume flows

$$\Delta p = \left(\frac{\dot{V}}{Kvs}\right)^2 \times 1\ \text{bar},\ \dot{V} \leq \dot{V}\ max$$

Example:

Heating circuit 70/55°C, heat generator output 40 kW

$$\Delta p = \left(\frac{2.3\ m./h}{31.8\ m^3/h}\right)^2 \times 1\ \text{bar} = 5.23 \times 10^{-3}\ \text{bar}$$

$$\dot{V} = \frac{40\ kW}{4.2\ kJ\ /\ (kg\ K)\ .\ (70\text{-}55)\ K} \times 3.600\ \frac{s}{h} \times \frac{1\ m^3}{1.000\ kg}$$

= 2.3 m^3/h ⟶ selected size Rp 1 1/4